item

Systematic innovation.

New Products 2013/ II

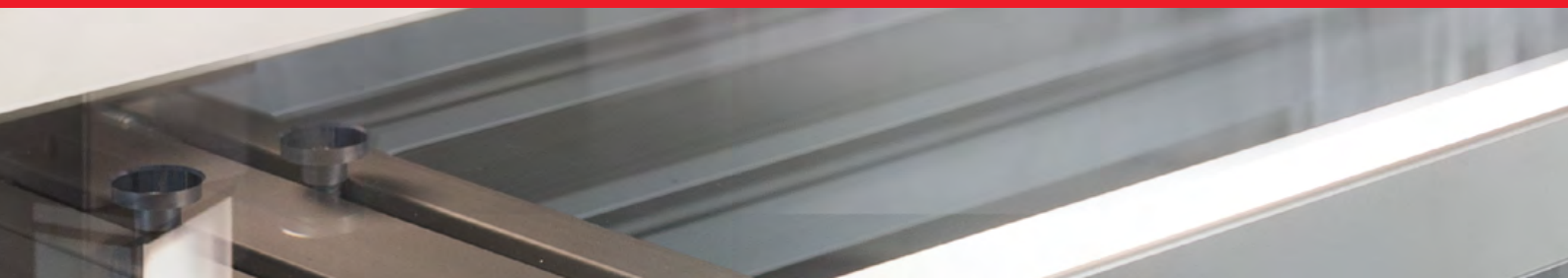

Experience innovation – new item products for 2013/ II.

04 MB Building Kit System

The MB Building Kit System just got stronger. Thanks to their large cross-sections, the new Profiles X 8 are ideal for use as strong struts. Diagonal Strut Set 8 can boost the load-carrying capacity of beams and support horizontal profiles, enabling users to build elegant and strong structures.

The new Multi-wall Sheet and Honeycomb Sheet can be cut to size with ease to produce lightweight protective panels in next to no time. When simple, washable screening or dust protection is called for, these panel elements offer a speedy solution.

14 Linear technology

Two new turnkey systems keep things moving fast when it comes to planning, installation and operation. Compact Linear Unit GSF takes up barely any more space than a standard profile and employs a small number of parts to deliver maximum performance. Its flat slide with Drive Unit glides along the profile groove with no need for lubricants.

Unpack and go is the motto for the fastest slide in the item portfolio. Slide LRF is supplied ready for installation and makes it much easier for users to mount applications. It offers a flat, face-milled surface and positioning collars that ensure add-ons can be positioned with pinpoint accuracy, thereby minimising setup times.

32 Line XMS

The new profiles in Line XMS save on installation space without compromising on performance. Profiles X 8 XMS are only 40 mm wide but offer all the usual benefits of the line, such as the option of using Door Lip Seals to keep dust and noise inside the enclosure.

Cover Profile X 8 Al closes over the groove in Lines X and XMS to create a flush, closed surface that is easy to keep clean. It is ideal for use in cleanroom applications and for producing a closed surface on Linear Unit KLE.

Safety Switch 8 – a step forward in safety. An encoded RFID chip uses contactless technology and sits entirely in the profile groove.

36 Work Bench System

The new products in the item Work Bench System save time and energy. Work bench 4 E FIFO features a stable frame for integrated roller conveyors that simplify FIFO picking. The work bench can be configured as required in next to no time thanks to our Online Product Configurator. As with all work benches from item, the 4 E FIFO also comes with a height-adjustment system.

Integrated power and data routing is what makes Profile 8 160x60 4N K56 stand out from the crowd. Used as a column in a table upright, this profile offers space for integrated plug sockets and telephone and network connections, thus ensuring the work bench is perfectly equipped and nobody gets tangled in cables.
The new light fittings from item boast the very latest in LED technology. Whether additional light is required over the whole work bench, around a particular machine or for a magnifier – item offers energy-efficient models for all needs. The new lighting range includes fittings in several sizes and a wide range of accessories.

52 LP Building Kit System

The new products in the LP Building Kit System deliver better freedom of movement and added speed. Release Unit D30 can be used to build customised shooters for the automatic loading and unloading of workstations. Transport containers are safely transported and unloaded at the right place thanks to selective actuation. As a result, a tugger train can serve numerous stations at the same time.

The new Roller Conveyor 6 40x40 is supplied ready for installation and is ideal for conveyor lines that handle heavy loads. Its rigid aluminium profile exhibits barely any deflection, even over long stretches. Side Guide Rails made from aluminium keep workpieces and crates safely on track and boost the rigidity of the roller conveyor by up to 50 percent. Castors can also be replaced individually without having to first remove others.

Profile Tube D30 can now be ordered in a handy length of 3000 mm. And if you want to make things as difficult as possible for dirt and dust, the new Cover Profile will safely cover over the channel in Profile Tube D30. That makes cleaning work a lot easier.

Foam protection.

Easy-to-fit impact protection

Protective Profile 6 30x15 E

Clip on to stay safe. Protective Profile 6 30x15 E is made of impact-absorbing PE foam, protects against scratches and absorbs impacts. The impact protection can be anchored firmly into a Line 6 groove and is also ideal for use as transport packing. It safely covers over profile edges and sides.

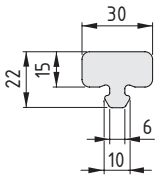

Protective Profile 6 30x15 E	
PE, foamed m = 27.0 g	
grey, 1 pce., length 2000 mm	0.0.656.71

Profiles X 8

The profiles in Line X can be built into elegant constructions, usually with closed surfaces. The minimised edge radius results in a seamless connection between profiles and eliminates protruding edges. When the job at hand is a big one, the new Profiles X 8 offer an ideal solution for building strong frames and constructions. Thanks to their large cross-section, they offer high resistance moment against profile deflection. This extends the range of potential building applications for Line X. Profiles X 8 are now also ideally suited for use as horizontal and vertical struts that can carry heavy loads.

Materials used in all the following products:
Al, anodized

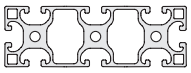

Profile X 8 120x40 light						
A [cm^2]	m [kg/m]	I_x [cm^4]	I_y [cm^4]	W_x [cm^3]	W_y [cm^3]	
16.31	4.40	24.88	225.53	12.44	37.59	
natural, cut-off max. 6,000 mm						0.0.656.63
natural, 1 pce., length 6000 mm						0.0.656.62

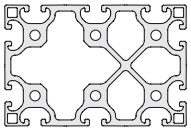

Profile X 8 120x80 light						
A [cm^2]	m [kg/m]	I_x [cm^4]	I_y [cm^4]	W_x [cm^3]	W_y [cm^3]	
30.36	8.20	204.88	427.82	51.22	69.34	
natural, cut-off max. 6,000 mm						0.0.656.69
natural, 1 pce., length 6000 mm						0.0.656.68

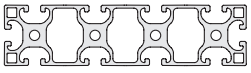

Profile X 8 160x40 light						Line 8
A [cm^2]	m [kg/m]	I_x [cm^4]	I_y [cm^4]	W_x [cm^3]	W_y [cm^3]	
21.16	5.71	32.58	509.90	16.29	63.74	
natural, cut-off max. 6,000 mm						0.0.656.65
natural, 1 pce., length 6000 mm						0.0.656.64

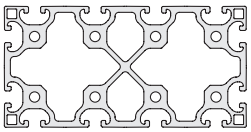

Profile X 8 160x80 light						Line 8
A [cm^2]	m [kg/m]	I_x [cm^4]	I_y [cm^4]	W_x [cm^3]	W_y [cm^3]	
37.99	10.26	270.35	919.31	67.59	114.91	
natural, cut-off max. 6,000 mm						0.0.656.70
natural, 1 pce., length 6000 mm						0.0.656.67

Keeping it clean.

Creates an easy-to-clean surface

Compatible with Line X and Line XMS profiles

Cover Profile X 8 Al

As you can see, there's nothing to see. Cover Profile X 8 Al stops dirt and dust getting into the grooves of Line X and Line XMS profiles It has been specially designed for the edge radii of these profiles and creates a closed, easy-to-clean surface that blends in perfectly with the overall look of constructions. It can also be used to safely cover over cables that have been routed through a groove.

Cover Profile X 8 Al is also compatible with the grooves on Linear Unit KLE, making it ideal for building automation solutions that will be used in a cleanroom environment.

Cover Profile X 8 Al	
Al, anodized m = 63.0 g	
natural, 1 pce., length 2000 mm	0.0.654.89

Strong support.

Increases load-carrying capacity

Diagonal Strut Set 8

Improved load-carrying capacity for individual supporting struts and cantilever arms! Diagonal Strut Set 8 300x300 is a strong solution that increases the load-carrying capacity of horizontal profiles. This means users can build more elegant constructions without having to compromise their suitability for day-to-day use.

The 45° diagonal struts have a closed, easy-clean outer surface.

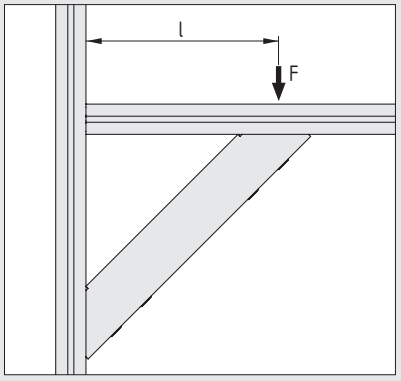

F < 1000 N ^ F x l < 300 Nm

Load-carrying capacity is to be checked to ensure both conditions are met.

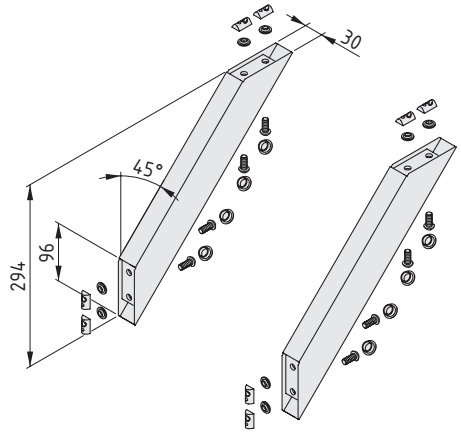

Diagonal Strut Set 8 300x30	
2 Diagonal Struts 8 300x30, St, white aluminium similar to RAL 9006 8 T-Slot Nuts 8 St M8, bright zinc-plated 8 Anti-Loss Washers M8, St, bright zinc-plated 8 Button-Head Screws ISO 7380-M8x20, St, bright zinc-plated 8 Caps 8 D15, PA, grey similar to RAL 7042 m = 2.3 kg	
1 set	0.0.659.03

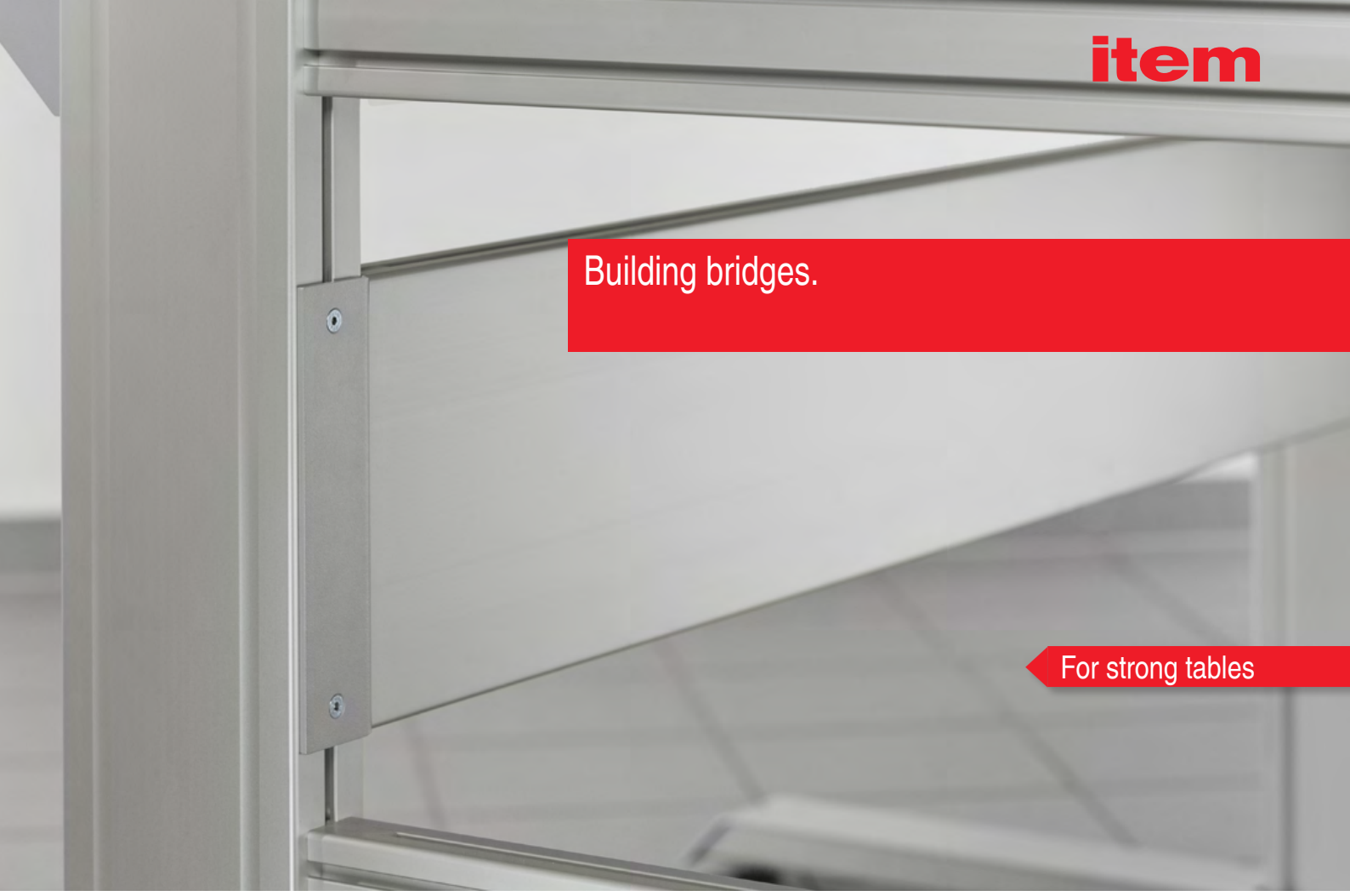

Building bridges.

For strong tables

Fastening Set Profile 8 240x40

When it comes to building customised, stable table frames, item has a range of special components to offer, such as Profile 8 160x60 4N E (0.0.644.15). It helps users construct frames and structures that are lightweight but nonetheless exhibit good load-bearing capacity. Profile 8 240x40 8N light (0.0.629.44) is ideally suited for adding extra rigidity and providing screening. Thanks to Fastening Set Profile 8 240x40, these cross profiles can be fitted with ease and adjusted to the perfect height.

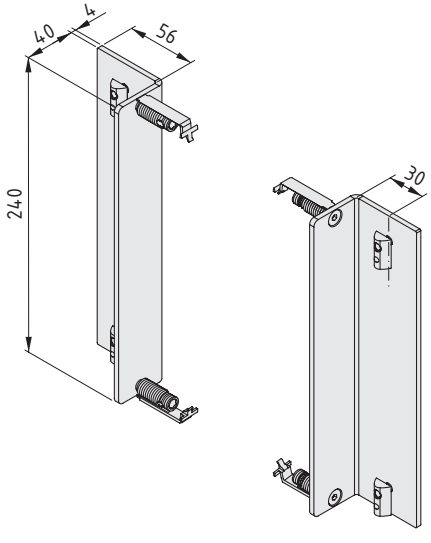

Fastening Set Profile 8 240x40	
2 angle brackets 240, St, white aluminium similar to RAL 9006 4 Automatic-Fastening Sets St, bright zinc-plated 4 Automatic-Fastening Set caps, PA-GF, grey 4 Countersunk Screws DIN 7991 M6x14, St, bright zinc-plated 4 Countersunk Screws DIN 7991 M6x20, St, bright zinc-plated 4 T-Slot Nuts 8 St M6, bright zinc-plated m = 1.5 kg	
1 set	0.0.656.06

Adjustable Foot D47, M10x30

The stable foot that offers added convenience. Making height adjustments is very simple because the screw is accessed from above.
Adjustable Foot D47, M10x30 can be adjusted easily using a 5 A/F key, such as when used in a table base or machine baseplate.

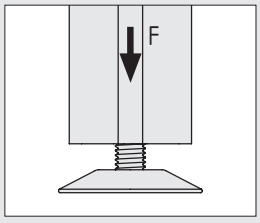

F = 1500 N

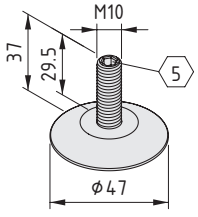

Adjustable Foot D47, M10x30	
St, bright zinc-plated m = 77.0 g	
black, 1 pce.	0.0.658.04

Screening made easy.

- Easy to machine
- Quick to install
- Panel elements for all scenarios

Multi-wall Sheet panels

When work has to move fast or a partition doesn't need to satisfy stringent safety requirements, Multi-wall Sheet panels are the answer. These lightweight panel elements made of easy-to-clean polypropylene can be cut to size with a knife and secured in place in a few easy steps. As a result, users can install a floor under a roller conveyor or splash protection between profiles in a matter of moments, for example.

The panels can be easily folded and bent along the direction of the internal walls. item offers a wide selection of additional panel elements for applications with more stringent requirements for load-carrying capacity

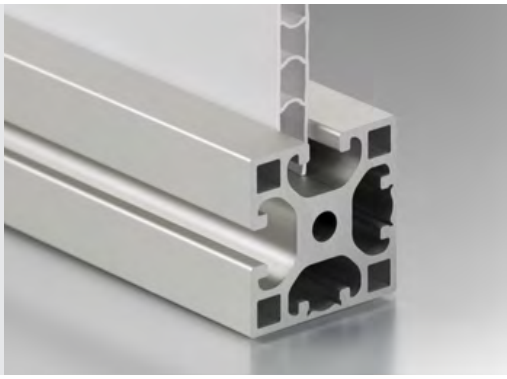

Materials used in all the following products:
PP

Multi-wall Sheet 4.5 mm PP	
Thickness tolerance ± 5% m = 0.90 kg/m²	
white, cut-off max. 3020x2020 mm	0.0.658.36
white, 1 pce. panel dimensions. max. 3050x2050 mm	0.0.658.35
grey, cut-off max. 3020x2020 mm	0.0.658.39
grey, 1 pce. panel dimensions. max. 3050x2050 mm	0.0.658.38

Multi-wall Sheet 8 mm PP	
Thickness tolerance ± 5% m = 1.50 kg/m²	
white, cut-off max. 3020x2020 mm	0.0.658.41
white, 1 pce. panel dimensions. max. 3050x2050 mm	0.0.658.40
grey, cut-off max. 3020x2020 mm	0.0.658.43
grey, 1 pce. panel dimensions. max. 3050x2050 mm	0.0.658.42

Honeycomb Sheet panels

Honeycomb Sheet panels are ideal for simple protective enclosures around machines. They prevent direct access, fend off minor impacts and are easy to clean.
Honeycomb Sheet is made from two smooth and even layers joined together by a honeycomb-shaped structure. Unlike Multi-wall Sheet panels, it is therefore rigid in all directions Nevertheless, it can still be cut to size and fixed in place just as quickly
item offers a wide selection of additional panel elements for applications with more stringent requirements for load-carrying capacity

Honeycomb Sheet 4 mm PP	
PP Thickness tolerance ± 5% m = 1.30 kg/m^2	
white, cut-off max. 3020x2020 mm	0.0.658.45
white, 1 pce. panel dimensions. max. 3050x2050 mm	0.0.658.44
grey, cut-off max. 3020x2020 mm	0.0.658.47
grey, 1 pce. panel dimensions. max. 3050x2050 mm	0.0.658.46

A gentle stop.

Limit Stop, Runway Profile 8

Runway Profile 8 40x40, natural (0.0.623.61) from item can be used to produce robust solutions for transporting products overhead. Limit Stop, Runway Profile 8 brings the Runway Slide to a gentle halt as it reaches the end of travel. Its elastic impact buffer easily absorbs shock loads. The elastic Limit Stop can be used instead of the PA limit stops with clip-in function that are supplied with Runway Slide Set 8 40x40 (0.0.624.45).

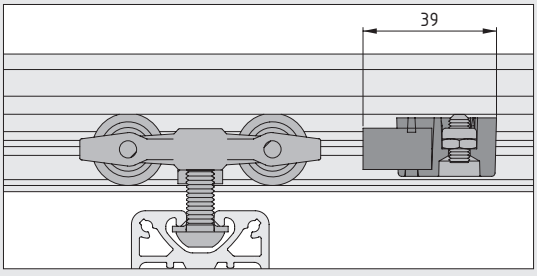

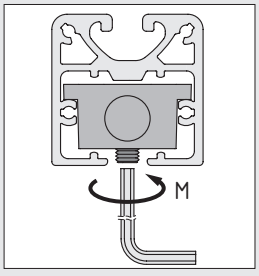

M = 2.5 Nm

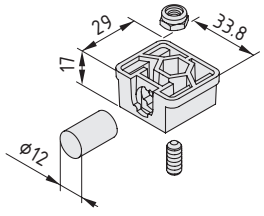

Limit Stop, Runway Profile 8

Limit Stop, PA-GF, grey similar to RAL 7042
Impact buffer, NBR, grey similar to RAL 7042
Grub screw DIN 916-M6x14, St, bright zinc-plated
Lock nut M6, St, bright zinc-plated
m = 16.0 g

1 set	0.0.659.13

On your guide, get set, go!

Complete Slide – unpack and go

Slides with a flat surface

Easy-adjust rollers

Slide LRF 8

Everything runs smoothly with this solution. Slide LRF 8 is a practical complete system for roller guides that run on Shafts D10 or D14, which are fastened to a Line 8 groove using Shaft-Clamp Profiles. It is delivered ready for installation and comprises a Carriage Profile with a flat surface and two quiet-running Double-Bearing Units with End Cap and Lubricating Systems. Simply slot it onto the shafts, adjust the rollers from the side, tighten everything up and that's it – your torsion-resistant linear slide is good to go. Slide LRF 8 is available for linear slides in a width of 40 and 80 mm.

Fitting functional elements is also incredibly easy. The upper surface of the slide has been milled flat and features four openings for positioning collars. As a result, any application can be fastened to the Slide with outstanding precision, which makes maintenance work easier and reduces setup times.

Slide LRF can also be combined with a Timing-Belt Drive or chain drive to form automated solutions.

Slide Sets LRF and Slide Profiles LRF can also be ordered separately to build slides in customised lengths.

Further details on the function and construction of roller guides can be found in Section 15 of the Comprehensive Catalogue MB Building Kit System.

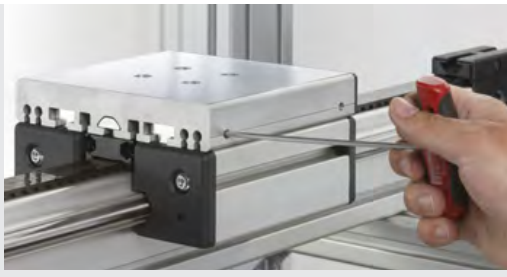

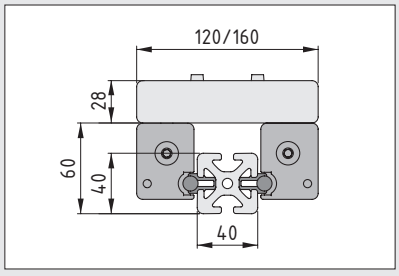

LRF 8 D10

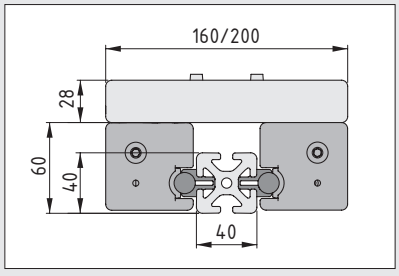

LRF 8 D14

Load specifications

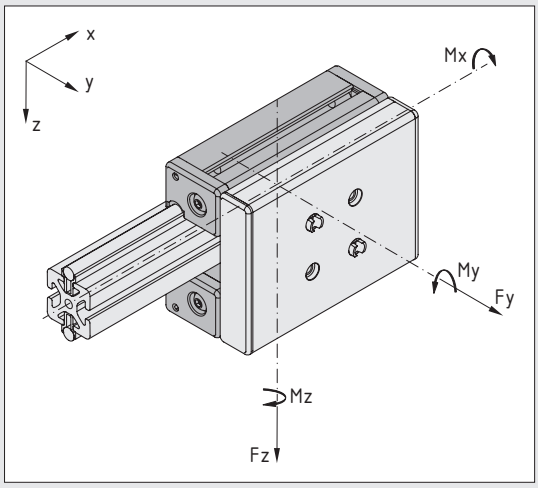

Simplified method for determining the maximum permissible load for Slide Sets LRF 8:

	8 D10		8 D14	
	120	160	160	200
F_y	880 N		1600 N	
F_z	1300 N		2400 N	
M_x	17 Nm	35 Nm	32 Nm	64 Nm
M_y	52 Nm		96 Nm	
M_z	35 Nm		64 Nm	

Run length under max. load: 10000 km
Max. speed: 10 m/s

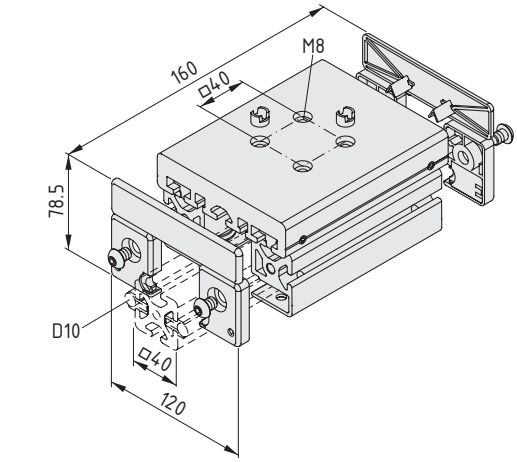

Slide LRF 8 D10 120x160

Slide LRF 8 D10 120x160, preassembled
2 End Cap and Lubricating Systems 8 D10, black
2 Caps LRF 8 D10 120x28, PA-GF, black
2 positioning collars, St
Installation guide
m = 2.1 kg

1 set	0.0.658.32

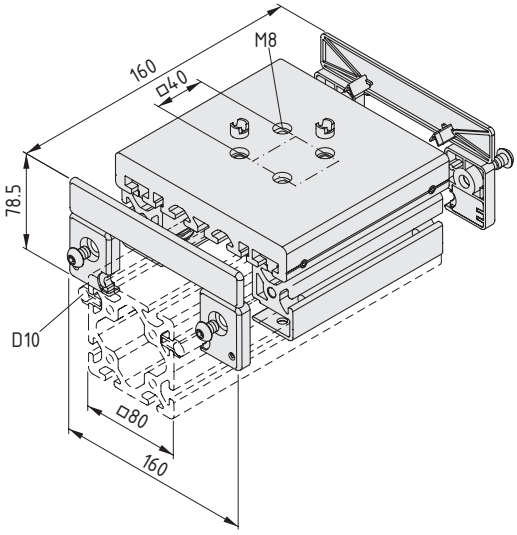

Slide LRF 8 D10 160x160

Slide LRF 8 D10 160x160, preassembled
2 End Cap and Lubricating Systems 8 D10, black
2 Caps LRF 8 D10 160x28, PA-GF, black
2 positioning collars, St
Installation guide
m = 2.5 kg

1 set	0.0.658.37

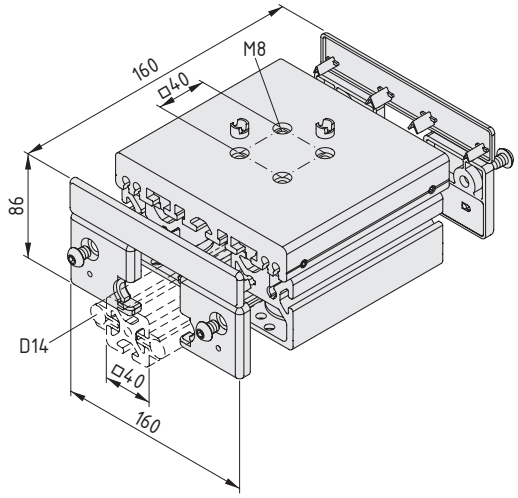

Slide LRF 8 D14 160x160

Slide LRF 8 D14 160x160, preassembled
2 End Cap and Lubricating Systems 8 D14, black
2 Caps LRF 8 D14 160x28, PA-GF, black
2 positioning collars, St
Installation guide
m = 3.5 kg

1 set	0.0.656.27

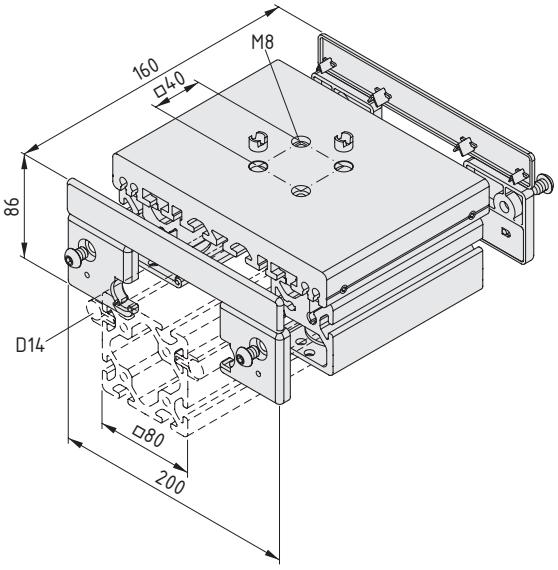

Slide LRF 8 D14 200x160

Slide LRF 8 D14 200x160, preassembled
2 End Cap and Lubricating Systems 8 D14, black
2 Caps LRF 8 D14 200x28, PA-GF, black
2 positioning collars, St
Installation guide
m = 3.8 kg

1 set	0.0.658.21

Slide Sets LRF 8

The ideal solution for customised slides! Slide Sets LRF 8, Slide Profiles LRF 8 and Adjuster Profile 8 can be used to design and build customised linear slides up to 3000 mm in length.Slide Set LRF 8 contains everything that a roller unit needs – Bearing Units, End Cap and Lubricating Systems and all the fastening elements required to install the four modules of the Slide Set with exceptional speed. There is no need for pinning.

Sets are available with either D10 or D14 rollers as appropriate to the loads involved. The Slide Sets are screwed to Adjuster Profile 8 (0.0.657.20). Two grub screws installed in the side of Slide Profile LRF 8 are used to adjust the Bearing Units so as to eliminate play.

Note: Fully preassembled Slides LRF 8 are also available in standard sizes.

Load specifications

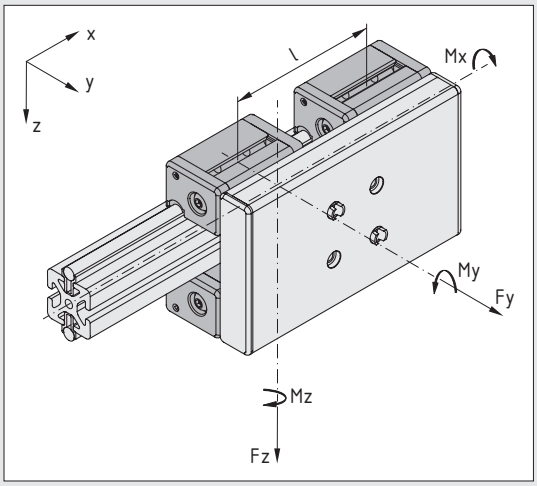

Simplified method for determining the maximum permissible load for Slide LRF 8:

	8 D10		8 D14	
	120	160	160	200
F_y	880 N		1600 N	
F_z	1300 N		2400 N	
M_x	17 Nm	35 Nm	32 Nm	64 Nm
M_y	650 N x l		1200 N x l	
M_z	440 N x l		800 N x l	

Run length under max. load: 10000 km
Max. speed: 10 m/s

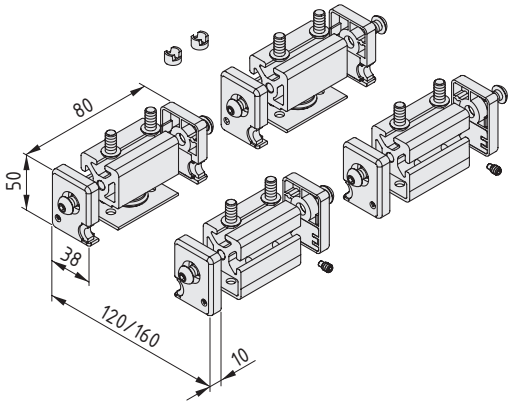

Slide Set LRF 8 D10

4 Bearing Units 8 D10 c
4 End Cap and Lubricating Systems 8 D10, black
2 grub screws DIN 915-M6x10, St, bright zinc-plated
8 Button-Head Screws ISO 7380-M8x16, St, bright zinc-plated
8 washers DIN 125-8.4, St, bright zinc-plated
2 positioning collars, St
Installation guide
m = 1.0 kg

1 set	0.0.658.83

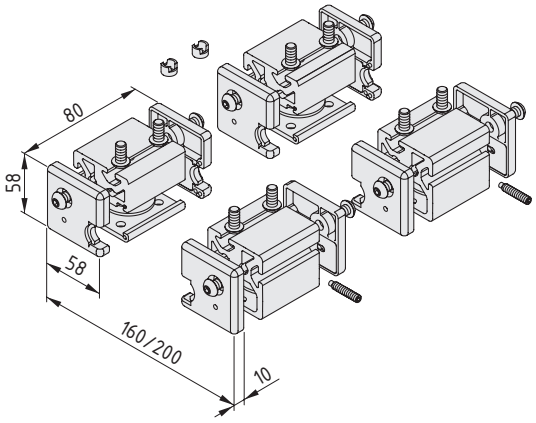

Slide Set LRF 8 D14

4 Bearing Units 8 D14 c
4 End Cap and Lubricating Systems 8 D14, black
2 grub screws DIN 915-M6x30, St, bright zinc-plated
8 Button-Head Screws ISO 7380-M8x16, St, bright zinc-plated
8 washers DIN 125-8.4, St, bright zinc-plated
2 positioning collars, St
Installation guide
m = 2.0 kg

1 set	0.0.658.67

Adjuster Profile 8

Adjuster Profile 8 ensures there is no play between the roller units and shaft, even on long slides. The bearing units of Slide Sets LRF 8 don't exhibit displacement over long-term use either. Consequently, Slide Profile LRF 8 runs with very little wear, even in the case of very long slides.

Slide Sets LRF 8 are fastened to the Adjuster Profile via a screw connection. The Profile is inserted into the special groove and runs the entire length of the slide.

Note: The Adjuster Profile needs to be machined before the Slide Set can be installed. Your item partner can do this as an additional service.

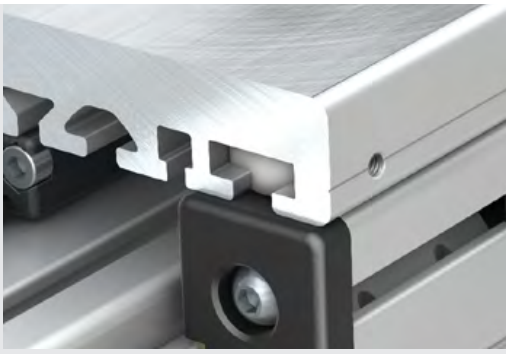

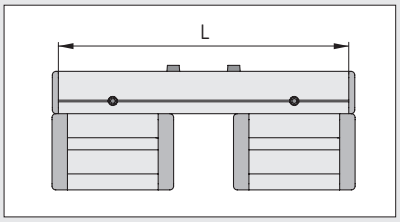

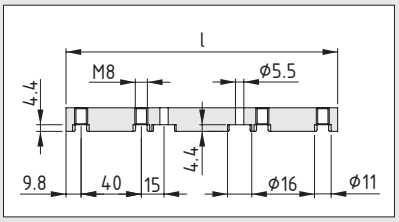

The length of the slide (L) determines how long the Adjuster Profile (l) needs to be.
l = L - 12.4 mm

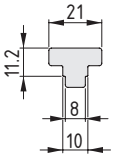

Adjuster Profile 8

Al
m = 592.0 g/m

natural, cut-off max. 6,000 mm	0.0.657.21
natural, 1 pce., length 6000 mm	0.0.657.20

Slide Profiles LRF 8

Slide Profile LRF 8 has two special features that make it easier to build customised units. The upper surface is milled flat and offers a great deal of space for incorporating application-specific fastenings. Installation, maintenance and application changeovers take just minutes. The underside of the Slide Profile features a Line 8 groove as well as special grooves to accommodate Adjuster Profile 8, to which the Slide Set LRF 8 is fastened. Two threaded bores need to be machined on one side to enable adjustment of the rollers. An indentation makes precise placement easier. One of the special grooves for the Adjuster Profile is wider than the other in order that the rollers can be adjusted via a grub screw so as to eliminate play.

Note: Please observe the recommended tightening torques (in the installation guide provided).

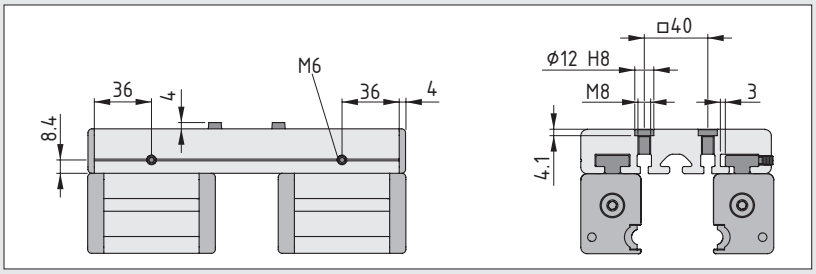

Machining requirements when using Slide Profiles LRF 8 in customised lengths. The indentations at the side offer a good point of orientation. The Slide Profiles allow users to locate mounting bores at will. The positioning collars can be used as necessary.

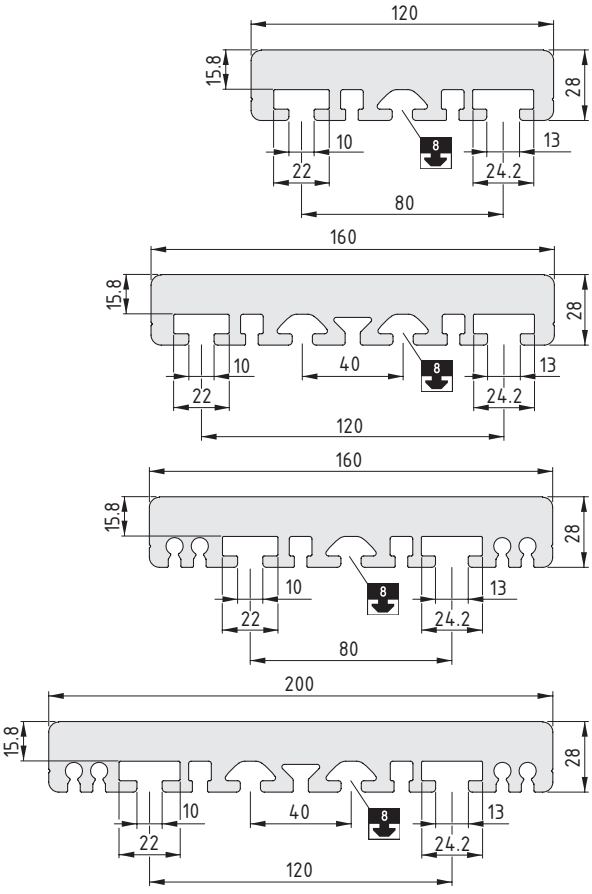

Materials used in all the following products:
Al, anodized

Slide Profile LRF 8 D10 120x28

A [cm²]	m [kg/m]	I_x [cm⁴]	I_y [cm⁴]	W_x [cm³]	W_y [cm³]	
26.08	7.04	16.36	320.81	9.73	13.32	
natural, cut-off max. 3000 mm						0.0.658.20
natural, 1 pce., length 3000 mm						0.0.658.03

Slide Profile LRF 8 D10 160x28

A [cm²]	m [kg/m]	I_x [cm⁴]	I_y [cm⁴]	W_x [cm³]	W_y [cm³]	
34.99	9.45	21.91	751.43	13.07	93.29	
natural, cut-off max. 3000 mm						0.0.658.23
natural, 1 pce., length 3000 mm						0.0.658.08

Slide Profile LRF 8 D14 160x28

A [cm²]	m [kg/m]	I_x [cm⁴]	I_y [cm⁴]	W_x [cm³]	W_y [cm³]	
35.13	9.49	21.80	777.78	13.07	96.79	
natural, cut-off max. 3000 mm						0.0.655.95
natural, 1 pce., length 3000 mm						0.0.645.39

Slide Profile LRF 8 D14 200x28

A [cm²]	m [kg/m]	I_x [cm⁴]	I_y [cm⁴]	W_x [cm³]	W_y [cm³]	
44.03	11.89	27.40	1,501.23	16.36	150.12	
natural, cut-off max. 3000 mm						0.0.655.97
natural, 1 pce., length 3000 mm						0.0.647.04

Caps LRF 8

End-face covering made of glass-fibre-reinforced plastic for Slide Profiles LRF 8. All grooves are cleanly covered over, cut edges do not need to be deburred.

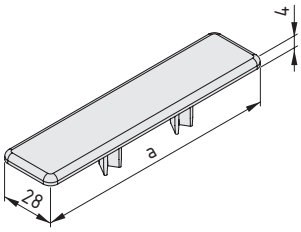

Materials used in all the following products:
PA-GF

Cap LRF 8 D10 120x28	8
a = 120 mm m = 14.0 g	
black, 1 pce.	0.0.657.72
Cap LRF 8 D10 160x28	8
a = 160 mm m = 18.0 g	
black, 1 pce.	0.0.658.30
Cap LRF 8 D14 160x28	8
a = 160 mm m = 18.0 g	
black, 1 pce.	0.0.656.26
Cap LRF 8 D14 200x28	8
a = 200 mm m = 22.0 g	
black, 1 pce.	0.0.657.00

The ultra-light glider.

- Compact turnkey system with T-Slot Slider
- Space-saving timing-belt technology
- Cost-effective solution for simple applications

Linear Unit GSF 8 40 R10

Light, quiet and high-performance! Linear Unit GSF 8 40 is an efficient turnkey system with minimal space requirements. This economic Linear Unit uses only a few components to deliver maximum performance. For example, the slide uses a Line 8 groove on the support profile as its guide. It runs without lubricants on a wear-resistant sliding shoe.

The Drive Unit and Reverse Unit feature an exceptionally compact design. The tensioning device for the Timing Belt is integrated into the Reverse Unit. Its ball-bearing mounted pulleys ensure quiet and smooth running over long-term use. The Timing Belt is routed back through the profile groove.

The compact dimensions and maintenance-free design make Linear Unit GSF 8 40 R10 an exceptionally efficient solution. It is ideal for applications that require the movement of low loads. The Linear Unit is available in two versions – with the drive shaft fitted to the right or left – to suit a range of installation scenarios.

Note: Linear Unit GSF 8 40 R10 is supplied ready for installation as a turnkey system in the desired stroke length. The components can also be ordered separately and assembled to form customised units.

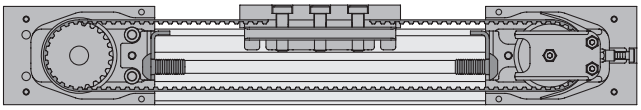

Due to their construction, slide guides can exhibit slight irregularities (stick/slip effect) when running at low speeds and under increased loads. This effect can be magnified when the Timing Belt is subject to excessive tension. Linear Unit GSF is recommended for use in applications that involve vertical loads.

Load specifications

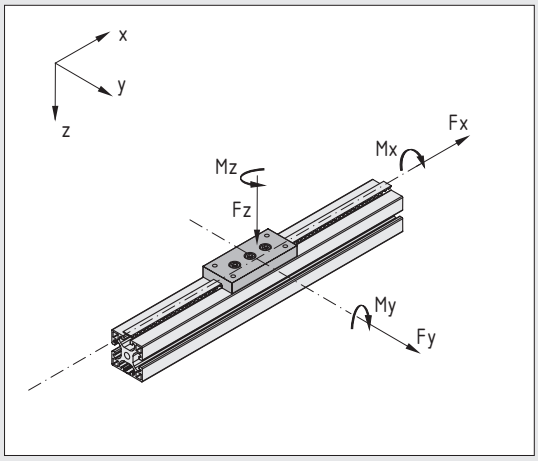

Simplified method for determining the maximum permissible load for the T-Slot Slider of a GSF:

GSF	$M_{x\,max}$ [Nm]	$M_{y\,max}$ [Nm]	$M_{z\,max}$ [Nm]	$F_{y\,max}$ [N]	$F_{z\,max}$ [N]
	0.4	2	1.25	25	50

The following applies forcombined loads:

$$\frac{|M_x|}{M_{x\,max}} + \frac{|M_y|}{M_{y\,max}} + \frac{|M_z|}{M_{z\,max}} + \frac{|F_y|}{F_{y\,max}} + \frac{|F_z|}{F_{z\,max}} \leq 1$$

Run length under max. load: 1000 km
Max. Speed: 1 m/s

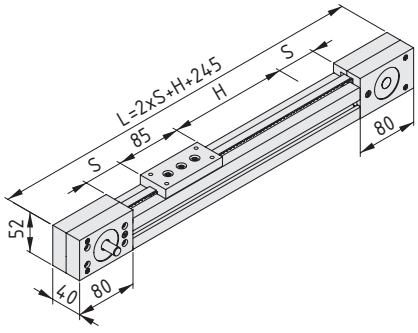

Linear Unit GSF 8 40 R10, drive side right

L_{min} = 300 mm
s_{min} = 27.5 mm
H_{max} = 5860 mm
m_1 = 2.7 kg
m_2 = 1.85 g/mm
Repeat accuracy = 0.5 mm
Installation guide

1 set	0.0.655.98

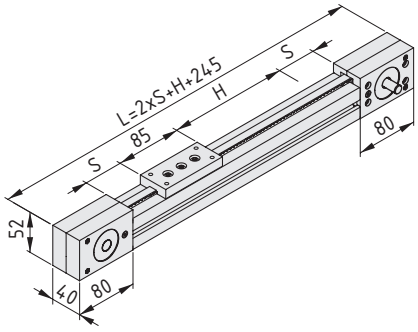

Linear Unit GSF 8 40 R10, drive side left

L_{min} = 300 mm
s_{min} = 27.5 mm
H_{max} = 5860 mm
m_1 = 2.7 kg
m_2 = 1.85 g/mm
Repeat accuracy = 0.5 mm
Installation guide

1 set	0.0.660.71

Small but perfectly formed.

8

Drive Unit GSF 8 40 R10
Timing-Belt Reverse Unit GSF 8 40 R10

It's so small and yet it's a complete timing-belt drive! All the components fit together to make a compact solution. The tensioning device for the Timing Belt is integrated into the Reverse Unit. The ball-bearing mounted pulleys ensure that everything runs smoothly.

The individual components of the T-Slot Slider can also be used to build customised drive solutions – Drive Unit and Timing-Belt Reverse Unit GSF 8 40 R10 can be used with a wide range of Line 8 profiles as a guide.

Further details on the function and construction of Drive Units can be found in Section 16 of the Comprehensive Catalogue MB Building Kit System.

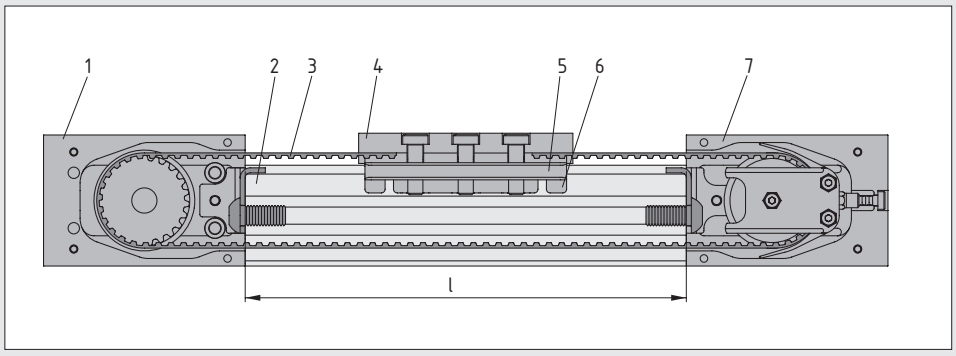

Belt length
L= 2 x l + 205 mm

1 Drive Unit GSF 8 40 R10
2 Profile X 8 40x40 1N
3 Timing Belt R10 T5
4 Slide plate*
5 Sliding shoe*
6 Slide*
7 Timing-Belt Reverse Unit GSF 8 40 R10

*(4, 5, 6 = Slide Set GSF 8 80x40)

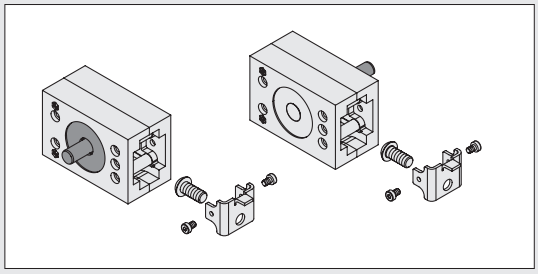

The drive side can be alternated as required by simply turning the Drive Unit 180°.

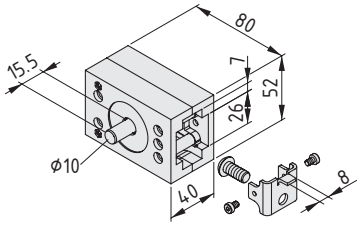

Drive Unit GSF 8 40 R10

Drive Unit Al, natural
Drive shaft ∅ 10 H9, St, stainless
Effective radius 18.3 mm
M_{max} = 2.5 Nm
Length of Timing Belt inside the Timing-Belt Reverse Unit: 137 mm
Button-Head Screw ISO 7380-M8x18, St, bright zinc-plated
Centring plate, St, stainless
2 Hexagon Socket Head Cap Screws DIN 6912-M4x6, St, bright zinc-plated
Installation guide
m = 378.0 g

1 set	0.0.654.21

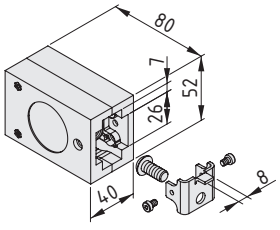

Timing-Belt Reverse Unit GSF 8 40 R10

Timing-Belt Reverse Unit Al, natural
Tensioning device
Length of Timing Belt inside the Timing-Belt Reverse Unit: 110 mm
Button-Head Screw ISO 7380-M8x18, St, bright zinc-plated
Centring plate, St, stainless
2 Hexagon Socket Head Cap Screws DIN 6912-M4x6, St, bright zinc-plated
Installation guide
m = 350.0 g

1 set	0.0.654.22

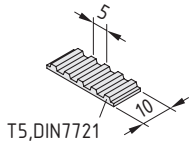

Timing Belt R10 T5

With integrated steel wires
Perm. load 300 N
K = 75 N
m = 23 g/m

black, cut-off max. 50 m	0.0.400.04
black, 1 roll length 50 m	0.0.400.11

Drive Set GSF 8 40

Drive Set GSF 8 40 can be used to connect any drives to Linear Unit GSF 8. The versatile coupling can be adapted for several different drive shafts and transfers drive torque without play.

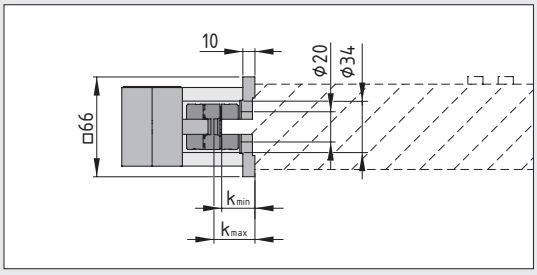

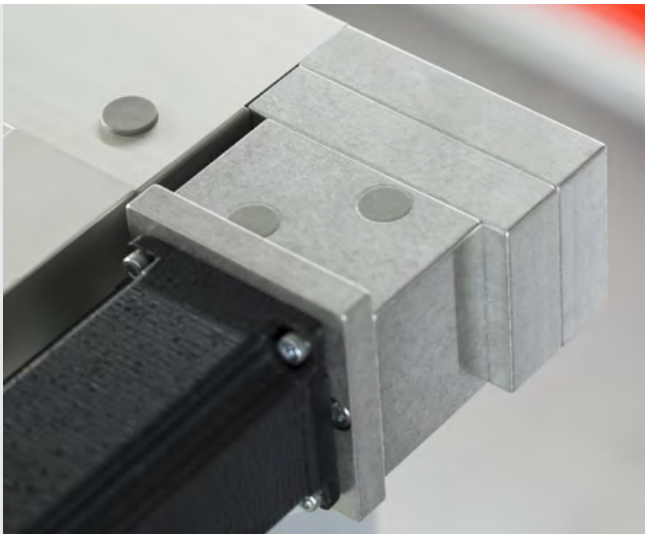

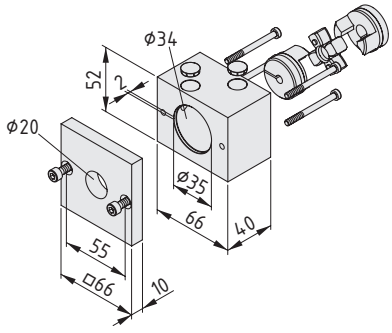

Drive Set GSF 8 40

8

Coupling adapter plate GSF 8, Al, natural
Connection housing GSF 8, Al, natural
Coupling Half D30/D10, Al, natural
Coupling Half D30/D6, Al, natural, reborable up to ∅16 mm
Hole diameter for drive shaft 6mm
Coupling Insert D30, PU 80 Sh A, blue
4 Hexagon Socket Head Cap Screws DIN 7984-M4x45, St, bright zinc-plated
2 Hexagon Socket Head Cap Screws DIN 912-M5x14, St, bright zinc-plated
2 Caps D30F, PAG GB30, grey

m = 477.0 g

1 set	0.0.654.23

Rock-steady.

Compact slide

Sliding shoe uses profile groove as guide

Slide Set GSF 8 80x40

The compact slide of the T-Slot Slider with integrated sliding shoe made of high-performance plastic. The solution requires no lubricants, is maintenance-free and uses a Line 8 profile groove as a guide. The Timing Belt is secured between the carriage plate and T-Slot Slider in a space-saving arrangement.
Slide Set GSF 8 80x40 can also be used without a Drive Unit as a simple slide guide running in a Line 8 profile groove.

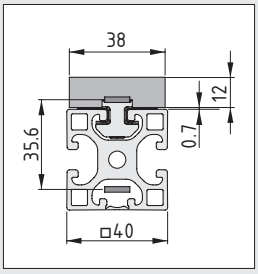

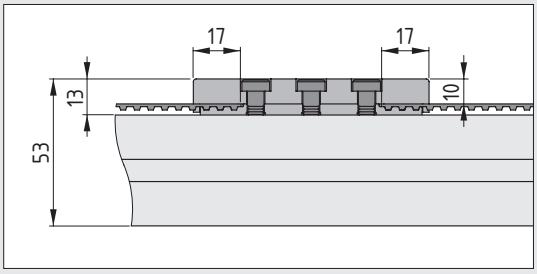

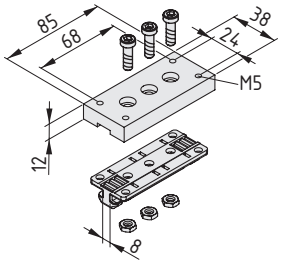

Slide Set GSF 8 80x40	
Carriage plate GSF 8 80x40, Al, natural T-Slot Slider 8 80x40 3 Hexagon Socket Head Cap Screws DIN 6912-M6x20, St, bright zinc-plated 3 hexagon nuts ISO 4035-M6, St, bright zinc-plated m = 173.0 g	
1 set	0.0.654.24

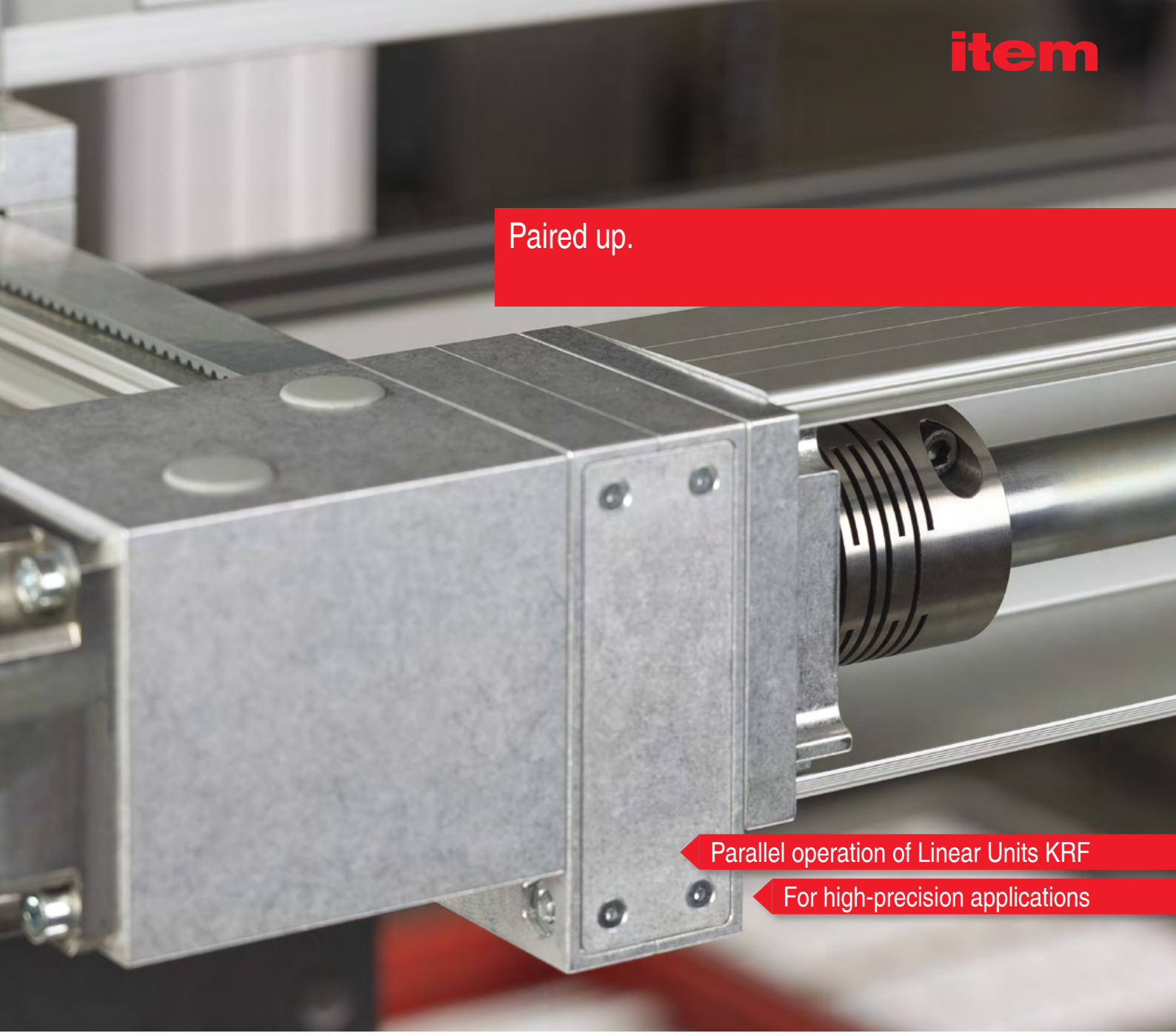

Paired up.

Parallel operation of Linear Units KRF

For high-precision applications

Linear Unit KRF 8 80x40 ZR, synchronous drive

Thanks to its criss-crossed roller guide and high-strength steel tracks, Linear Unit KRF is ideal for demanding applications
Two Linear Units KRF can also be used in parallel and synchronised together. In this case, Linear Unit KRF 8 80x40 ZR, synchronous drive permits connection to a Synchroniser Shaft on the opposite side to the motor. Synchronising Set KRF 8 80 ZR (0.0.648.58) is used to make this connection.

Further details on Linear Units KRF can be found in Section 16 of the Comprehensive Catalogue MB Building Kit System.

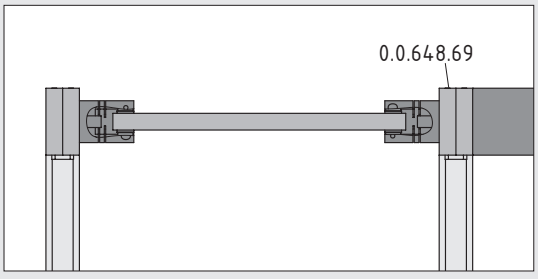

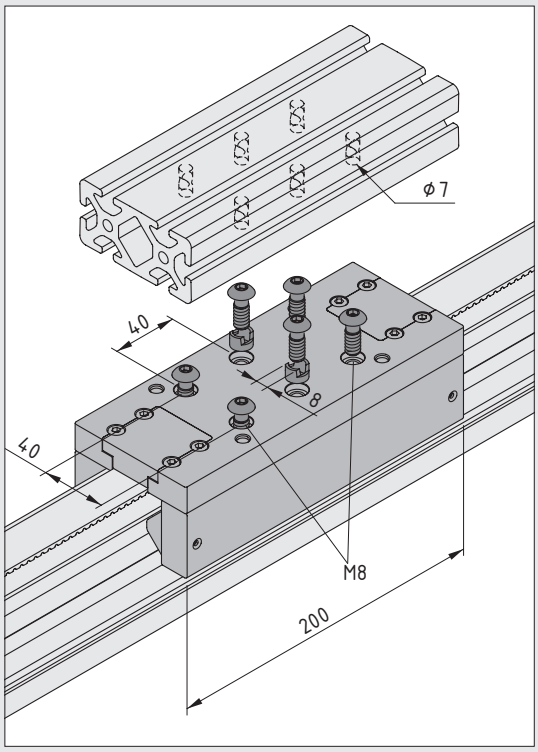

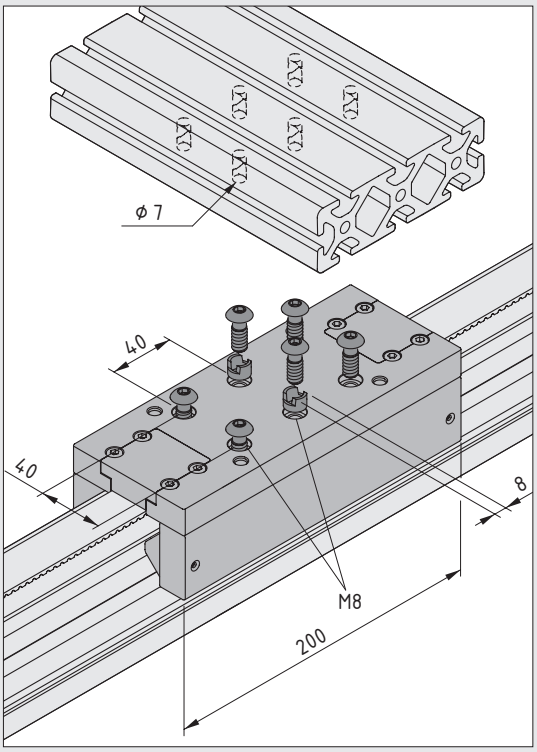

Complete Linear Units with variable stroke length (H), Drive Unit and Reverse Unit, support profile with integrated Roller Guide on guide tracks, preset free of play. Timing-belt tensioning device integrated into Reverse Unit, ball-bearing-mounted pulleys.

Guide slide with eight-piece roller-bearing mounting, oil-lubricated roller contact (re-lubrication every 6 months or every 2500 km)

Acceleration: max. 10 m/s^2
Stroke velocity: max. 10 m/s

Linear Unit KRF boasts exceptional precision and low-vibration linear movement. Repeat accuracy is ± 0.1 mm.

The mass of a Linear Unit KRF can be determined from the stroke length (without payload):

$m = m_1 + H \times m_2$

Load Specifications

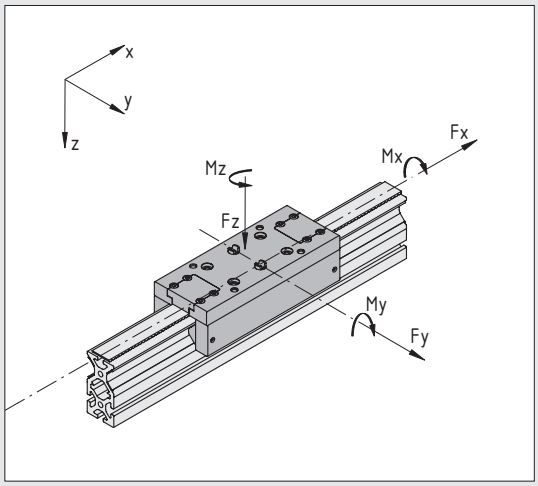

Simplified method for determining the maximum permissible load for the Roller Guides of a KRF:

KRF	$M_{x\,max}$ [Nm]	$M_{y\,max}$ [Nm]	$M_{z\,max}$ [Nm]	$F_{y\,max}$ [N]	$F_{z\,max}$ [N]
	50	175	175	2,500	2,500

$$\frac{|M_x|}{M_{x\,max}} + \frac{|M_y|}{M_{y\,max}} + \frac{|M_z|}{M_{z\,max}} + \frac{|F_y|}{F_{y\,max}} + \frac{|F_z|}{F_{z\,max}} \leq 1$$

Deflection

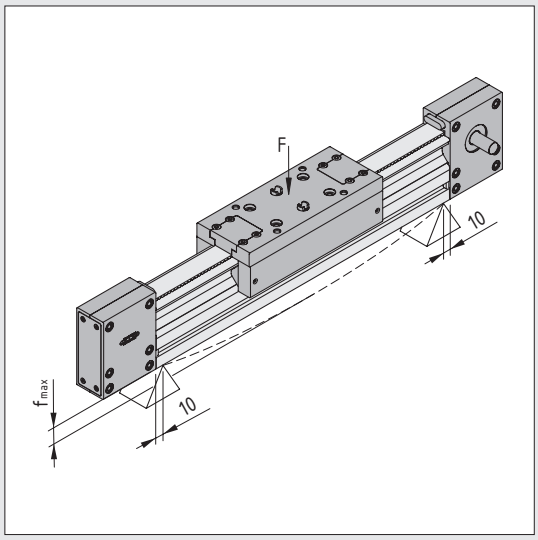

The maximum deflection, f_{max} of the system is governed by the dimension of the profile cross-section, the free profile length and the force applied. It should not exceed 1 mm/m. The KRF profile must be given appropriate support if the linearity of movement has to be very precise.

The mass moments of inertia of the profile provide the basis for calculating the deflection:

Y / Z	Linear Unit KRF 8
I_y	95.66 cm^4
I_z	22.05 cm^4
I_t	20.06 cm^4
W_y	23.80 cm^3
W_z	11.02 cm^3

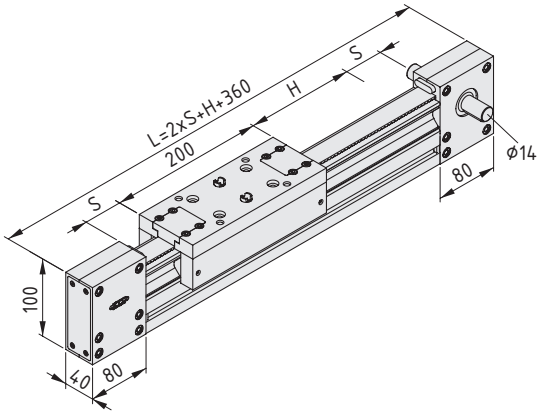

Linear Unit KRF 8 80x40 ZR, synchronous drive	
L_{min} = 400 mm s_{min} = 20 mm H_{max} = 5760 mm m_1 = 6 kg m_2 = 4.3 g/mm Installation guide	
1 set	0.0.648.69

Synchronising Set KRF 8 80 ZR

The robust equaliser couplings made from stainless steel connect the Synchroniser Shaft to Linear Units KRF. Tube D25x3 (0.0.609.83) is recommended for use as a shaft.

Note: The protective layer of zinc must be removed from the ends of the Tube D25x3 St prior to installation.

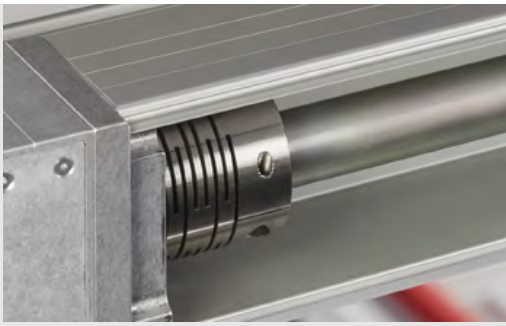

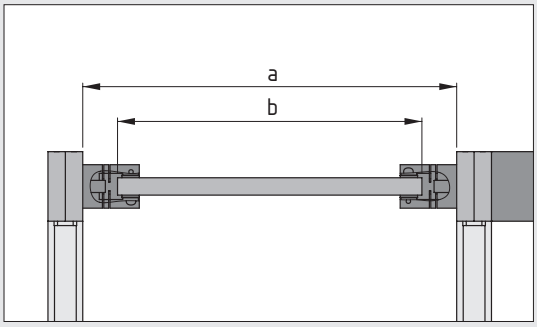

b = a - 80

a = distance between Linear Units

b = length of shaft

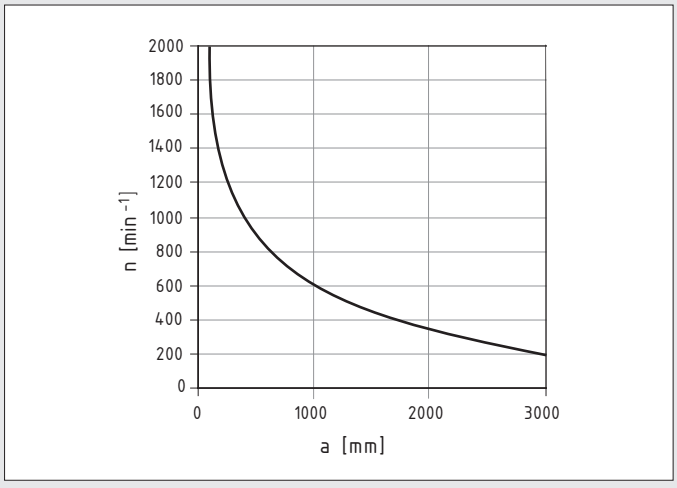

The permissible speed of the Synchroniser Shaft depends on its length.

n = Rotational speed of the Synchroniser Shaft
a = Distance between Linear Units

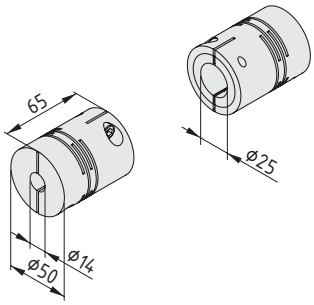

Synchronising Set KRF 8 80 ZR	
2 equaliser couplings D50, St, stainless m = 1.2 kg	
1 set	0.0.648.58

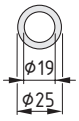

Tube D25x3 St						
St						
m [kg/m]	I_x [cm^4]	I_y [cm^4]	I_t [cm^4]	W_x [cm^3]	W_y [cm^3]	
1.63	1.28	1.28	2.53	1.02	1.02	
bright zinc-plated, cut-off max. 6,000 mm						0.0.609.83
bright zinc-plated, 1 pce., length 6000 mm						0.0.609.82

Keep dirt and debris out.

Secure housing for the Synchroniser Shaft

Synchroniser Shaft Cover Set KRF 8 80 ZR

Covering the Synchroniser Shaft on all sides improves machine safety and keeps dirt out of the system. The Conduit Profile of Synchroniser Shaft Cover Set KRF 8 80 ZR can be opened and closed easily to allow maintenance work.

The components contained in the Synchroniser Shaft Cover Set are used to secure the conduit elements between the Drive Units of the KRF.

a = distance between the Linear Units
c = length of the conduit elements

Conduit Profile U 80x80 E (7.0.002.74)
Lid Profile D80 E (7.0.002.73)
c = a - 24 mm (adapter plate thickness = 12 mm)

The Conduit Profiles must be provided with DIN 74-Af4 countersinks to secure them.

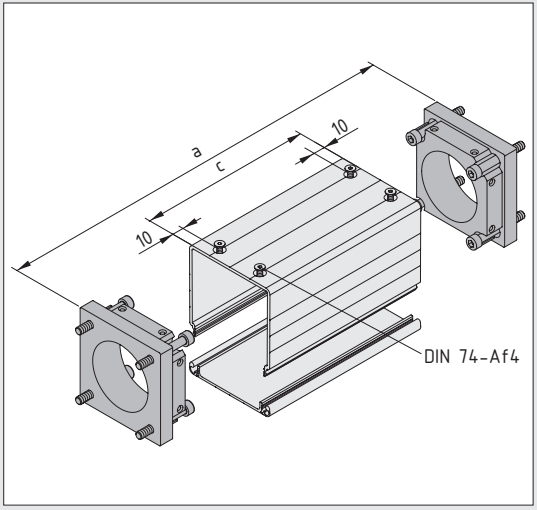

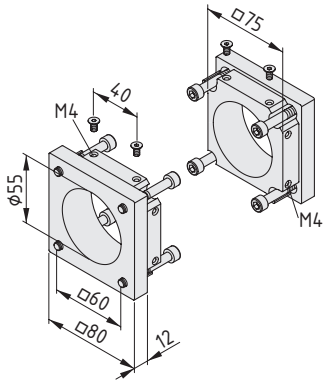

Synchroniser Shaft Cover Set KRF 8 80 ZR	
2 synchroniser adapter plates KRF 8 80x80, Al, natural 4 Hexagon Socket Head Cap Screws DIN 912 M6x45, St, bright zinc-plated 4 Hexagon Socket Head Cap Screws DIN 912 M6x60, St, bright zinc-plated 4 Countersunk Screws DIN 7991 M4x8, St, bright zinc-plated m = 540.0 g	
1 set	0.0.648.59

XS for XMS.

For building slimline XMS frames

Profiles X 8 - XMS

Want the advantages of Line XMS, but in a smaller size? Then Profiles X 8 40x40 - XMS are exactly what you're looking for. They feature closed sides and are pre-prepared to accommodate door seals. What's more, two doors can close against Corner Profile X 8 40x40 2N90 - XMS. Door Lip Seal T2 - XMS (0.0.649.87) uses the special groove of the inside corner and seals both doors together. item offers Door Lip Seal T1 - XMS (0.0.649.88) for use with Profile X 8 40x40 1N - XMS. Profiles X 8 40x40 - XMS create exceptionally slender frame constructions in Line XMS.

Note: Use Door Profiles X 8 - XMS to build doors that are sealed all the way around. Lip Seal 4-5 mm - XMS (0.0.649.86) can be used to install panel elements snugly and eliminate rattle. Further information about the properties and components of Line XMS is available online.

Materials used in all the following products:
Al, anodized

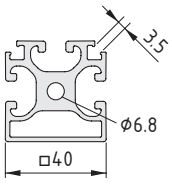

Profile X 8 40x40 1N - XMS						Line 8
A [cm²]	m [kg/m]	I_x [cm⁴]	I_y [cm⁴]	W_x [cm³]	W_y [cm³]	
6.11	1.65	8.30	8.52	4.04	4.26	
natural, cut-off max. 6,000 mm						0.0.651.10
natural, 1 pce., length 6000 mm						0.0.649.99

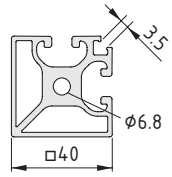

Profile X 8 40x40 2N90 - XMS						Line 8
A [cm²]	m [kg/m]	I_x [cm⁴]	I_y [cm⁴]	W_x [cm³]	W_y [cm³]	
6.07	1.64	8.34	9.07	4.16	4.53	
natural, cut-off max. 6,000 mm						0.0.649.49
natural, 1 pce., length 6000 mm						0.0.649.48

Consider the matter closed.

A door rabbet and seal in one

Seal two doors at one corner

Line

Door Lip Seals T

Door Lip Seals T are a door rabbet and seal for constructions built using compact Profiles X 8 40x40 - XMS. They fit into the special angled grooves of these profiles.

Door Lip Seal T2 - XMS (0.0.649.87) seals two doors at the same time when they meet in the corner at a Profile X 8 40x40 2N90 - XMS (0.0.649.49). By contrast, Door Lip Seal T1 - XMS is intended for sealing a single door.

Note: Door Lip Seal 8 - XMS (0.0.649.89) is used with Profiles X 8 - XMS with seal grooves.

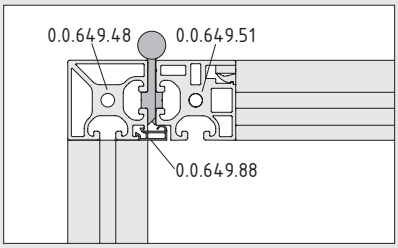

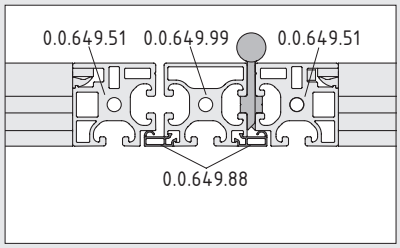

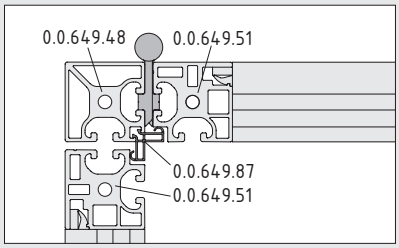

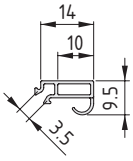

Door Lip Seal T1 - XMS	Line
PP/TPE m = 34 g/m	
grey similar to RAL 7042, 1 pce., length 3000 mm	0.0.649.88

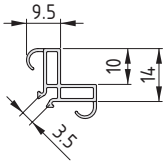

Door Lip Seal T2 - XMS	Line
PP/TPE m = 55 g/m	
grey similar to RAL 7042, 1 pce., length 3000 mm	0.0.649.87

Look – don't touch.

Contactless switch with RFID technology

Integrated safety functions

Actuator sits entirely in the profile groove

MACHINERY 2006/42/EC DIRECTIVE

Line 8

Safety Switch 8, 24V DC

A new dimension in safety. Safety Switch 8, 24V DC uses contactless switching and therefore offers a long and reliable service life free from mechanical wear. This is made possible by an encoded electronic system that uses RFID technology. Each actuator features a coded chip and is completely concealed in the Line 8 groove. The switch registers whether the chip is within the sensor range with outstanding precision. In contrast to mechanical systems, the encoded chip is extremely tamper-proof.

The system ensures repeat accuracy for switching points and an exceptional safety standard. Two short-circuit-proof safety outputs forward signals to the switchbox. The safety lines feature integrated monitoring for cross circuits, wire breakages and interference-voltage. Up to 31 switches can be connected in series to combine various measurement points. A three-colour LED on each switch enables users to check its operating status at a glance. Thanks to IP67 protection, Safety Switch 8 can be used in most environments.

When used in the XMS profile system, a self-adhesive section of Door Lip Seal ensures a continuous all-round seal.

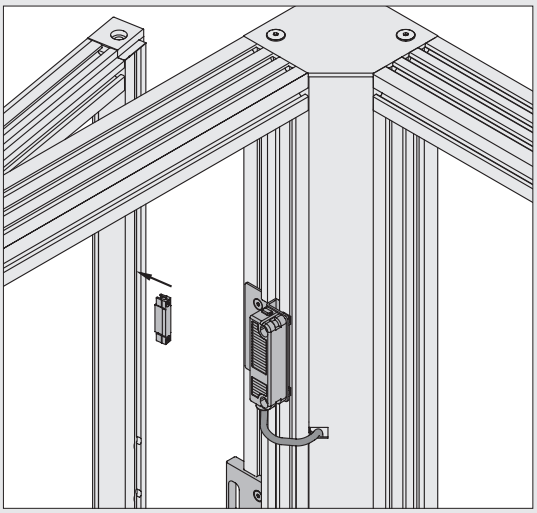

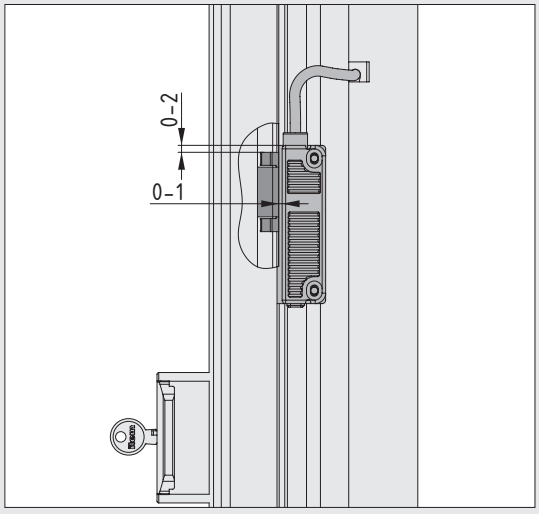

The actuator must be positioned at the pre-set distance from the switch in order to trigger the switch signal.

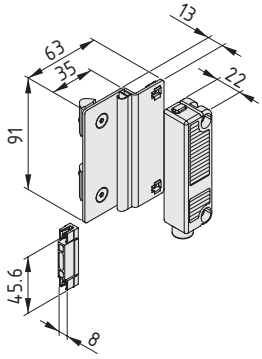

Safety Switch 8, 24V DC

Safety Switch 24V DC, preassembled
24V DC actuator
Protection type: IP67 to EN 60529
Standards: PL-E to EN ISO 13849-1, SIL 3 to IEC 61508, IEC 60947-5-3
Service life: 20 years
Fastening plate, St, stainless
Door Lip Seal, self-adhesive, grey similar to RAL 7042
2 security countersunk screws M5x12, St, stainless
2 T-Slot Nuts V 8 St M5, bright zinc-plated
m = 186.0 g

1 set	0.0.658.28

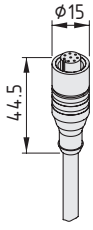

Connecting Cable, Safety Switch 8, 24V DC

5 m
m = 247.0 g

1 pce.	0.0.659.29

FIFO = Fast In, Fast Out.

TABLE 4E FIFO

Work bench with FIFO picking system

Freely configurable shelf arrangement

Electric height-adjustment system

Work bench 4 E FIFO

The item work bench 4 E FIFO – a logical and efficient combination of work bench and FIFO rack. Strong and steady with a customisable configuration.

To keep work moving fast, this ergonomic work bench can be fitted with roller conveyors on several different levels. It is easy to design a customised material provisioning system that includes a return facility for empty containers. The work bench can be configured with material picking and provisioning systems from the Work Bench System and elements from the Lean Production Building Kit System.

Work bench 4 E FIFO doesn't shy away from heavy loads either. Its design is extremely resistant to torsion and can carry a maximum load of 4,000 N. However, the work bench also features an electric height-adjustment system, meaning it can be tailored to the user's size to offer an ergonomic working environment. Thanks to a clear display and freely programmable working heights, work bench 4 E FIFO can be moved to loading and unloading positions with ease.

Work bench 4 E FIFO is available in six basic sizes and four different table top materials. It can also be enhanced using elements from the wide range of accessories in the Work Bench System, such as Overhangs and cable ducts. The Product Configurator at www.item24.de/config-wb will help you design the perfect work bench for your needs in no time.

Click. Click. Job done!

End-to-end solutions at your fingertips. On-line Product Configurators help you to plan solutions and work out every last detail right up to a completed parts list.
www.item24.de/config-wb

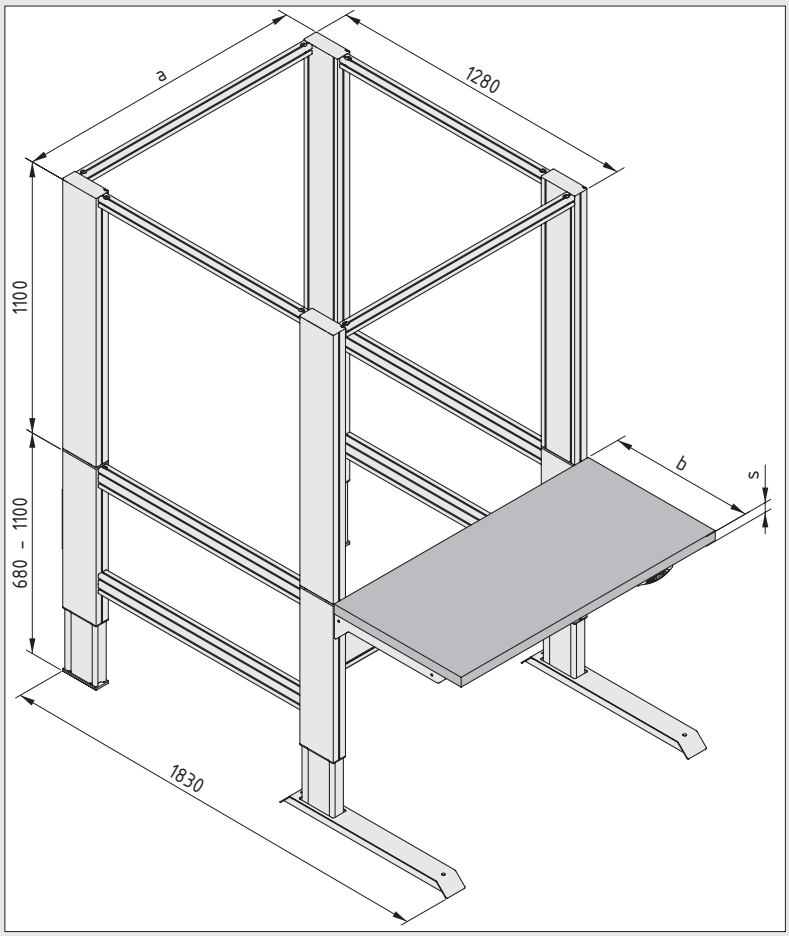

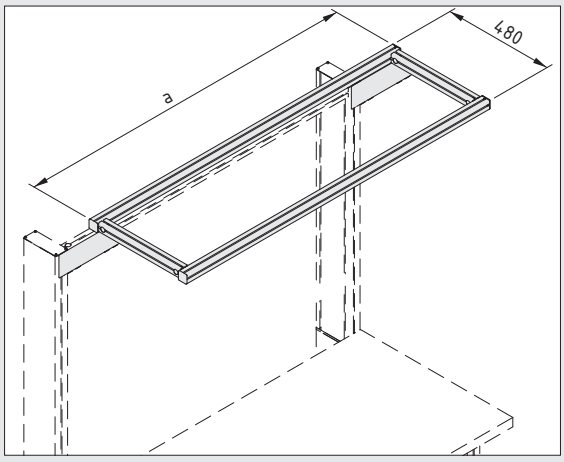

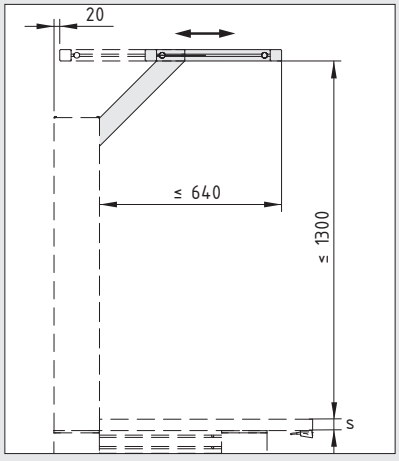

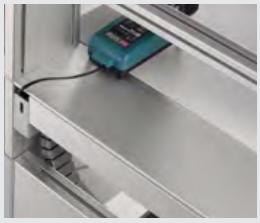

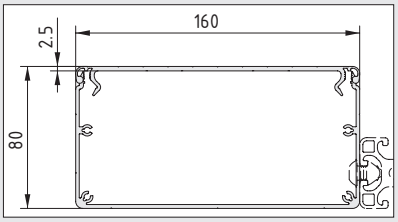

If required, work bench can be enhanced with the addition of a suitable table Overhang and a Cable Duct.

Work bench 4 E FIFO	Table top material				Optional attachments	
Dimensions a x b mm	Plastic coated s = 25 mm	High pressure laminate s = 30 mm	High pressure laminate/ESD s = 30 mm	Beech multi-ply s = 40 mm	Overhang	Cable Duct E
1200 x 600	•	•	•	•	o	o
1200 x 750	•	•	•	•	o	o
1500 x 600	•	•	•	•	o	o
1500 x 750	•	•	•	•	o	o
1800 x 600	•	•	•	•	o	o
1800 x 750	•	•	•	•	o	o

• Required
o Optional

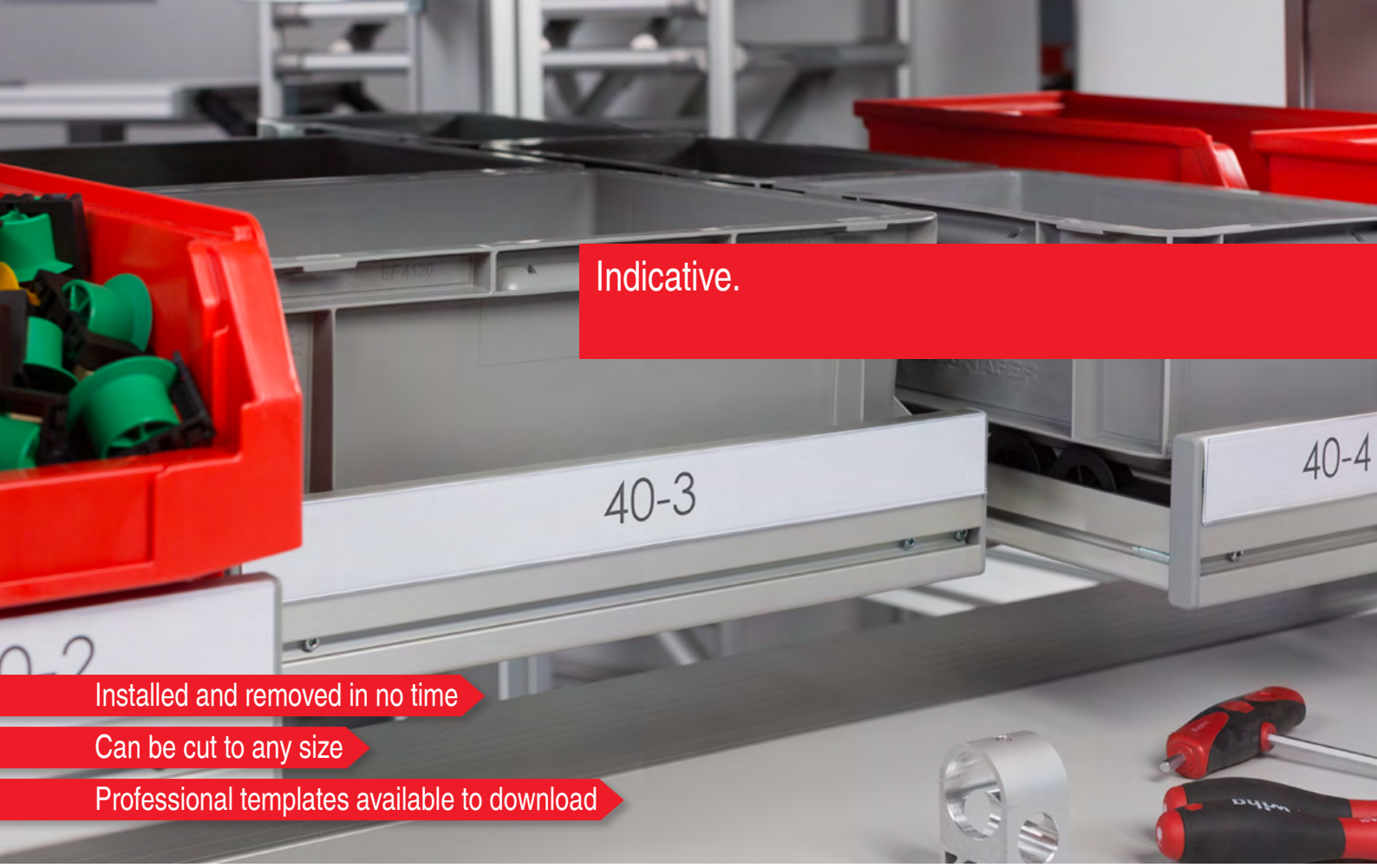

Indicative.

Installed and removed in no time

Can be cut to any size

Professional templates available to download

Label Profile 8 40 E

Only shorthand is faster. Label Profile 8 40 E clips into a Line 8 system groove in one easy move. No need for tools, no need for several different components. Label cards are kept safe and secure behind transparent PVC and are slotted into place from above. It's the quickest way to keep racks, SystemMobiles and roller conveyors clearly labelled.

Label Profile is available in cut-offs or in 2000 mm lengths to be cut to size by users – with the item Multi-Purpose Pliers (0.0.265.63), for example. Every storage location can be clearly labelled to ensure everything is properly organised.

Label cards can be designed to suit requirements and can include graphics. item offers professional templates that users can download and add their own text to.

TIP

You can access compatible and editable templates online, in the download section for this product.

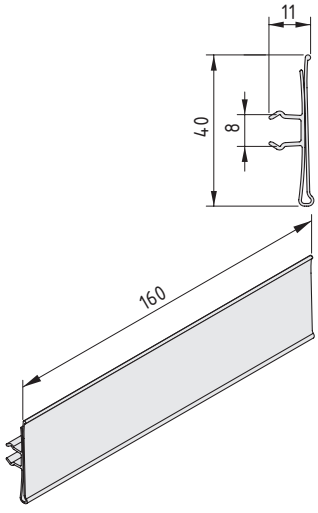

Label Profile 8 40 E	
PVC m = 106 g/m	
grey/transparent, 1 pce., length 2000 mm	0.0.654.46

Label Profile 8 40 E-160	
PVC m = 17.0 g	
grey/transparent, 1 pce.	0.0.654.59

Security of supply.

With integrated cable conduit

Suitable as an upright on item work benches

8

Profile 8 160x60 4N K56

The profile for the customised delivery of power and data – power at the top, network connection at the bottom, telephone line in the middle? No problem! Profile 8 160x60 4N K56 allows users to locate their Multi-Socket Power Strips and Distribution Strips where they like. Power lines and data cables can also be routed through its integrated cable conduit to the perfect position. Securing clips keep everything neat and make it much easier to lay cables.

Profile 8 160x60 4N K56 also acts as an upright and can be used with work benches E, 4E, 2F and F2F.

Click. Click. Job done!

End-to-end solutions at your fingertips. Online Product Configurators help you to plan solutions and work out every last detail right up to a completed parts list.

www.item24.de/config-wb

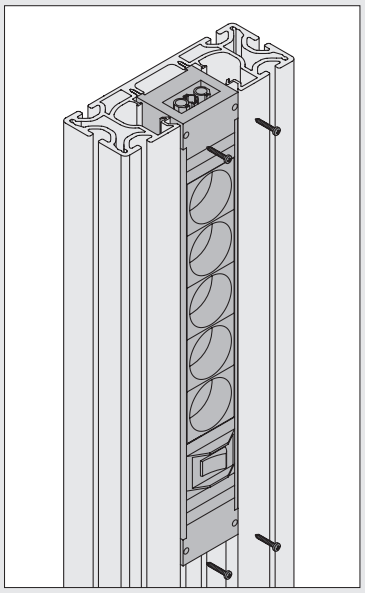

Distribution Strips and Multi-Socket Power Strips are fastened to the profile via screw connections.

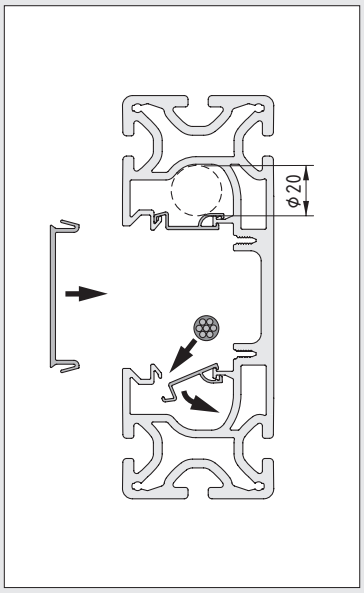

Cables measuring up to 20 mm in diameter can also be routed through Profile 8 160x60 4N K56 at any time after installation. Catch 40, Conduit Profile K retains cables in the internal conduits.

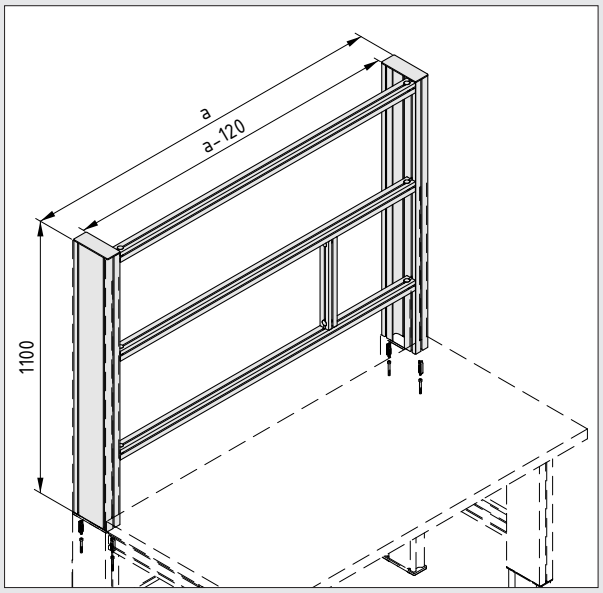

Profile 8 160x60 4N K56 is ideal for use in uprights on work benches E, 2F, 4E and F2F.

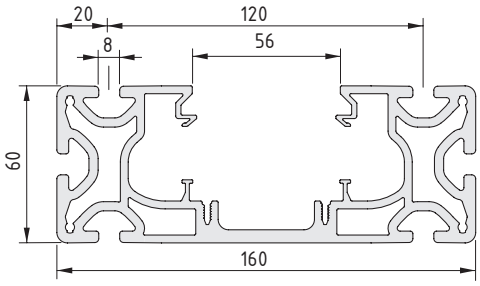

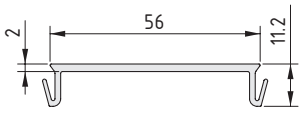

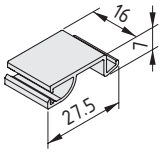

Profile 8 160x60 4N K56

Al, anodized

A [cm²]	m [kg/m]	I_x [cm⁴]	I_y [cm⁴]	W_x [cm³]	W_y [cm³]	
26.40	7.14	110.90	829.00	32.40	103.62	
natural, cut-off max. 6,000 mm						0.0.657.37
natural, 1 pce., length 6000 mm						0.0.657.24

Cover Profile 56 K

PVC
m = 214.0 g

grey similar to RAL 7042, 1 pce., length 2000 mm	0.0.643.80

Catch 40, Conduit Profile K

m = 1.0 g

grey similar to RAL 7042, 1 pce.	0.0.648.08

Distribution strip inserts

The inserts slot seamlessly into a Distribution Strip (0.0.631.56) and Profile 8 160x60 4N K56 (0.0.657.37), allowing you to position USB and network connections precisely where they are needed. Connecting cables ensure your installation is perfect for your needs.

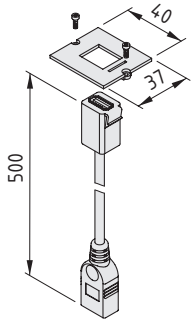

Distribution Strip Insert USB K56

Socket connector/socket connector USB-A, 3.0 (backward compatible)
Connecting cable
m = 23.0 g

1 set	0.0.660.32

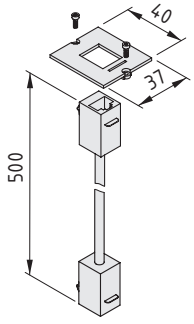

Distribution Strip Insert RJ45 K56

Socket connector/socket connector, network RJ45, CAT 6
Connecting cable
m = 23.0 g

1 set	0.0.660.33

Dirtbag.

Self-opening and closing lid

Flush fitting

Waste Bin 35l

One swipe and everything is gone. The self-opening and closing lid of the Waste Bin means it can be used with just one hand. As it is flush-mounted against the table top, order can be restored to a working surface in one easy fluid motion.
The robust fabric bag of the Waste Bin can handle discarded products and reusable parts without any need for a liner. However, it is advisable to use a Waste Sack when filling the bin with general rubbish. The bag can be easily removed for cleaning.
For added safety, the flexible material of the bag is designed to collapse during a collision.

Universal fastening elements mean that the Waste Bin can also be mounted on SystemMobiles, directly to a Line 8 groove or to a D30 construction.

The professional solution for a clean and tidy working environment.

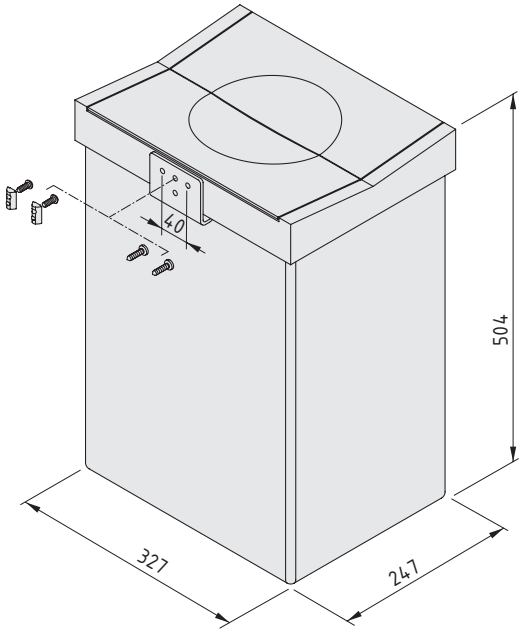

Waste Bin 35l	
Swing lid, ABS Bracket, St Container, PVC coated fabric 1 Waste Sack, PE-LD 2 Spax button-head screws 6x25 2 Button-Head Screws ISO7380-M6x16 2 T-Slot Nuts V 8 St M6, bright zinc-plated m = 2.5 kg	
1 set	0.0.650.66

Waste Sack 35l	
PE-LD 570x600 mm m = 430.0 g	
black, 1 roll of 20 Sacks	0.0.659.78

Cable layer.

- Easy to process
- Simply clip into a Line 8 groove
- Three separate conduits

Cable Guide Profile 8 40x16

The fastest cable conduit solution from item – simply cut to length and press into a Line 8 groove. The profile incorporates three separate conduits, which makes it incredibly easy to lay and replace individual cables as necessary. Cables can even be laid around corners by pushing Cable Guide Profiles up against each other.

item Multi-Purpose Pliers (0.0.265.63) are all that is needed to cut the profile to size.

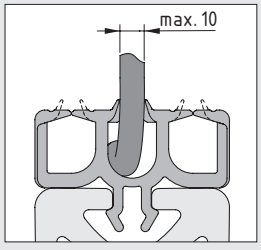

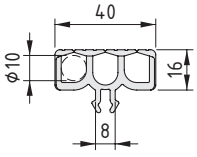

Cable Guide Profile 8 40x16		
PVC		
A [cm²]	m [kg]	
3.30	0.9	
grey similar to RAL 7042, 1 pce., length 2000 mm		0.0.654.44

ECO

LED Illuminated Magnifier D150

When every detail counts, LED Illuminated Magnifier D150 is the ideal solution. Measuring 150 mm in diameter, the magnifier incorporates a ring of LEDs that provide glare-free lighting for workpieces. A dimmer function allows users to decrease brightness to as low as 10 percent. The scratch-resistant lens offers a distortion-free view of workpieces.

Thanks to six swivelling axes and a head joint that allows adjustment in three dimensions, the Illuminated Magnifier can be moved into the perfect position and locked in place. The balanced rods allow virtually effortless adjustment and support intuitive operation.

The LEDs have a service life of up to 50,000 hours and, with a connected load of just 14 Watts, use up to 40 percent less energy than conventional illuminated magnifiers. Besides being good for the environment, this energy saving system also supports sustainable cost efficiency.

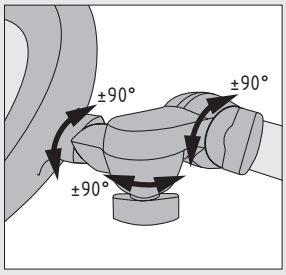

When it comes to carefully inspecting or handling tools under a magnifier, everyone has different requirements. LED Illuminated Magnifier D150 supports user needs with a whole range of functions. The 3.5 dioptre lens makes objects appear around two times larger than normal. The high-performance LEDs are arranged in a ring around the lens and deliver a maximum light intensity of 6000 Lux. The magnifier is also continuously dimmable down to 10 percent brightness, enabling users to tailor lighting to the task at hand.

Special lighting effects can also be used by switching individual segments on and off. For example, the visualiser function can be used to highlight structures with shadows, thereby uncovering cracks and the tiniest irregularities in surfaces.

Colour rendering level 1A (Ra = 90) ensures that colours and colour differences appear as they ought to.

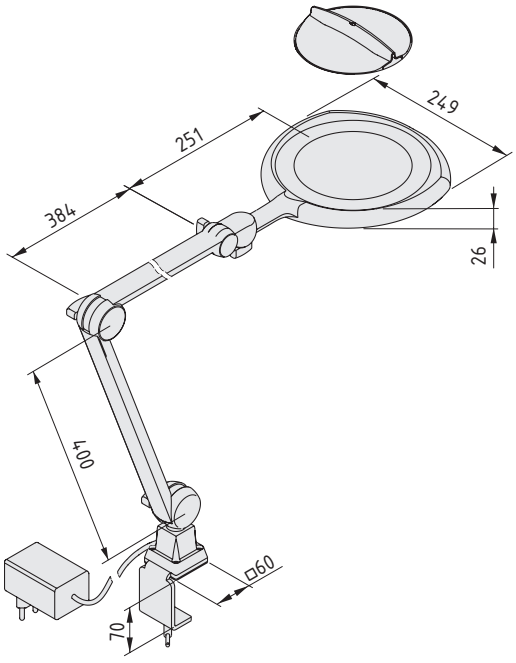

LED Illuminated Magnifier D150	
Lens ∅ 150 mm, 3.5 dioptre Protective cover Table clamp 0-65 mm Aluminium rods Sensor switch with dimmer and task-appropriate lighting Protection class: II Output: 14 W Connecting cable, black, L = 3.6 m with plug transformer, Euro/UK plug connector Rated voltage: 100-240 V AC, 50/60 Hz m = 3.0 kg	
1 pce.	0.0.656.55

LED Machine Light Fittings

With Machine Light Fittings available in five sizes, there's a lighting solution for every machine. Everything from the most awkward corner to large cabins can be lit up. Thanks to IP 67 protection, the light fittings can also be used in harsh environments. They are fixed in place using a Line 8 groove, while an integrated hinge allows users to direct light where it is needed. When designing work benches, the Machine Light Fittings offer a space-saving solution for boosting lighting levels on the work surface.

Using the latest generation of LEDs, the fittings deliver clear energy savings and can also be combined with accessories including cables and electronic transformers. An ingenious system of power supply and control elements, cables and splitters makes it easy to configure customised lighting scenarios, even including dimmer functions.

Technical data for the various Machine Light Fitting designs is available on the relevant product pages online at **www.item24.com**.

Note:
Additional accessories can be found on

50

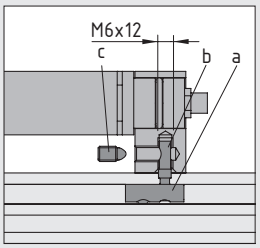

All LED Machine Light Fittings from the 6W version upwards feature an integrated hinge.

Installing an LED Machine Light Fitting on a Profile 8 using the fastening elements supplied:

a = T-Slot Nut V 8 St M5 (0.0.480.54)
b = clamping pin M5
c = grub screw M6

The following applies to all the products below:

Aluminium casing IP67, rotatable
Fastening elements
Rated voltage: 24V DC
Protection class: III
M8 plug connector

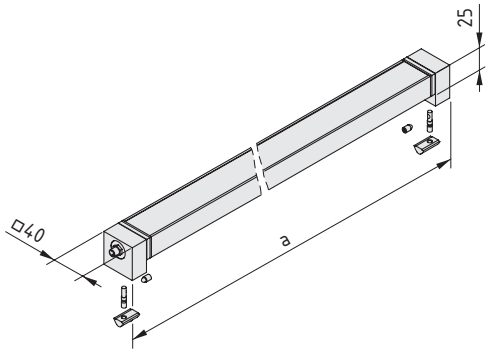

LED Machine Light Fitting 6W 40x40x240

a = 240 mm m = 0.4 kg

1 set 0.0.656.15

LED Machine Light Fitting 12W 40x40x415

a = 415 mm m = 0.6 kg

1 set 0.0.656.16

LED Machine Light Fitting 18W 40x40x590

a = 590 mm m = 0.8 kg

1 set 0.0.656.17

LED Machine Light Fitting 24W 40x40x765

a = 765 mm m = 1.0 kg

1 set 0.0.656.18

LED Machine Light Fitting 30W 40x40x940

a = 940 mm m = 1.2 kg

1 set 0.0.656.19

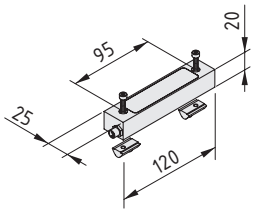

LED Machine Light Fitting 5W 25x20x120

Aluminium casing IP67
Fastening elements
Rated voltage: 24V DC
Protection class: III
Output: 5W LED Light Fitting
M8 plug connector
m = 189.0 g

1 set 0.0.660.30

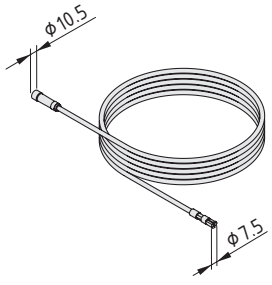

Connecting Cable, LED Machine Light Fitting

Cable length 5 m (0.34 mm²)
Cable diameter ∅ 5 mm
Safety plug connector M8, system plug
m = 195.0 g

1 pce. 0.0.656.52

Enlightenment.

- Even, glare-free lighting
- Position as required
- Energy saving
- State-of-the-art LED technology

LED Light Fittings

Lighting is a crucial aspect of work bench ergonomics. Cutting-edge LED Light Fittings from item support fatigue-free and efficient working practices. The reflector grid and diffusor panel on the fittings combine to make sure light is distributed evenly and without glare.

What's more, the latest, cutting-edge LED technology achieves maximum light output with minimum power consumption. The integrated ON/OFF switch incorporates two lighting levels and can be further enhanced using an optional wireless dimmer system.

Technical data for the various Machine Light Fitting designs is available on the relevant product pages online at **www.item24.com**.

Note:
Additional accessories can be found on

50

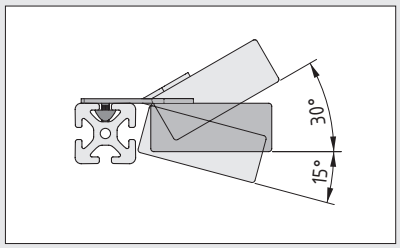

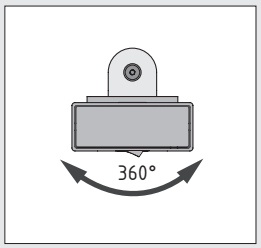

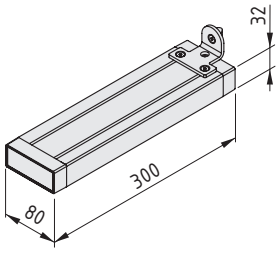

LED Light Fitting 15W 80x32x300

Aluminium casing
ON/OFF switch, 2 levels, 50/100%
Fastening elements
Rated voltage: 24V DC via system socket connector
Protection class: III
Output: 15W LED Light Fitting
m = 0.8 kg

1 set	0.0.659.97

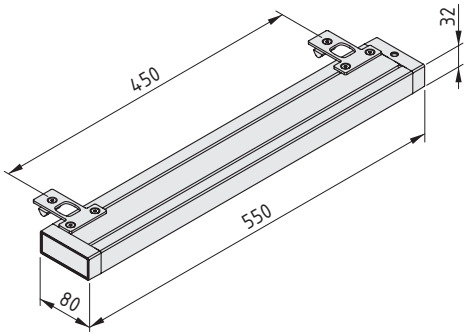

LED Light Fitting 30W 80x32x550

Aluminium casing
ON/OFF switch, 2 levels, 50/100%
Fastening elements
Rated voltage: 24V DC via system socket connector
Protection class: III
Output: 30W LED Light Fitting
m = 1.7 kg

1 set	0.0.659.96

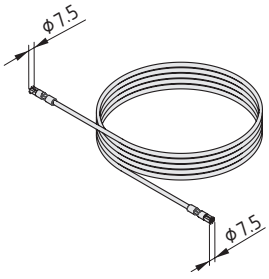

Connecting Cable, LED Light Fitting

Cable length 3 m (0.75 mm²)
Flat cable 3.5x5.4 mm
System plug connector, system plug connector
m = 112.0 g

1 pce.	0.0.660.07

LED Machine Light Fitting and LED Light Fitting accessories

Cables and Splitters can be used to control several LED light fittings from one place. Electronic Transformers should be selected as appropriate to the output of the relevant light fitting. A range of compatible control and power supply components can be used to configure the optimum lighting scenario.

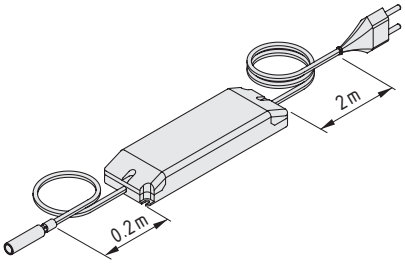

Electronic Transformer LED 30W 24V

System socket connector
Euro plug connector 100 - 240 V AC, 50/60 Hz
m = 240.0 g

1 pce.	0.0.658.29

Electronic Transformer LED 75W 24V

System socket connector
Euro plug connector 100 - 240 V AC, 50/60 Hz
m = 410.0 g

1 pce.	0.0.660.52

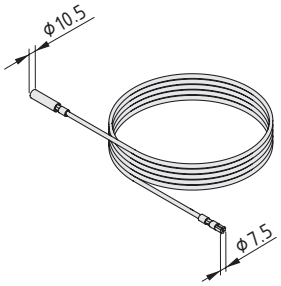

Extension Cable, LED Light Fitting

Cable length 2 m (0.75 mm²)
Flat cable 3.5x5.4 mm
System plug connector, system socket connector
m = 75.0 g

1 pce.	0.0.656.49

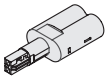

Two-way LED Splitter

1x system plug connector, 2x system socket connectors
m = 15.0 g

1 pce.	0.0.660.56

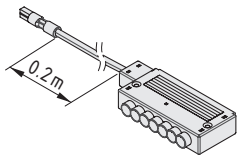

Six-way LED Splitter

1x system plug connector, 6x system socket connectors
m = 35.0 g

1 pce.	0.0.660.55

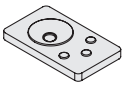

Wireless LED Dimmer Remote

Lithium battery CR2032
Storage box
Fastening elements
m = 45.0 g

1 set	0.0.661.39

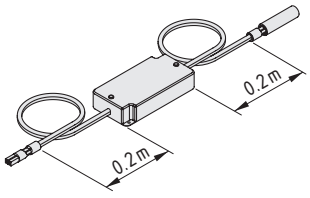

Wireless LED Dimmer Receiver

Connecting cable 72 W
System plug connector, system socket connector
m = 40.0 g

1 pce.	0.0.660.54

1 Select light fitting

LED Light Fitting 15W / 30W

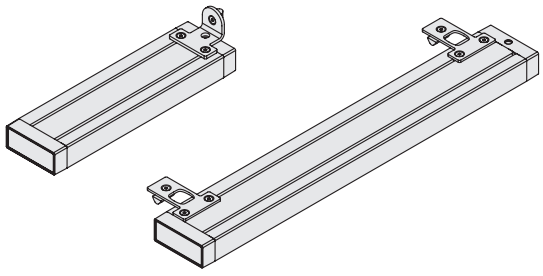

Connecting Cable, LED Light Fitting

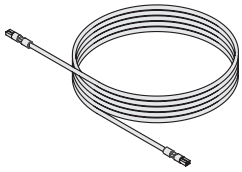

LED Machine Light Fitting
5W / 6W / 12W / 18W / 24W / 30W

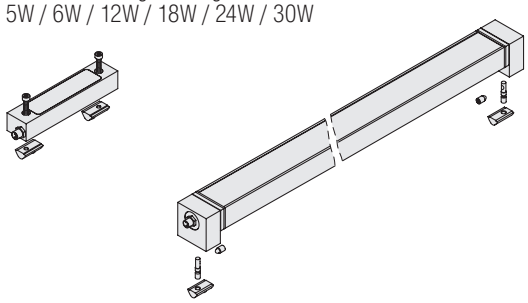

Connecting Cable, LED Machine Light Fitting

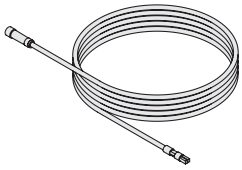

2 Select optional accessories

Extension Cable, LED Light Fitting

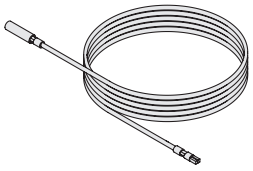

Two-way LED Splitter

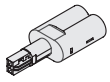

Six-way LED Splitter

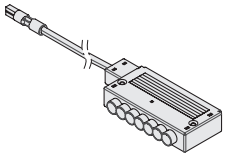

Wireless LED Dimmer Remote

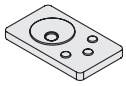

Wireless LED Dimmer Receiver

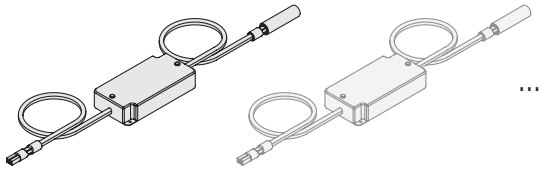

...

3 Select transformer

Electronic Transformer LED 30W 24V

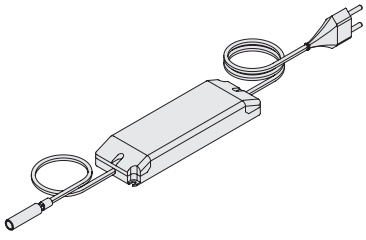

Electronic Transformer LED 75W 24V

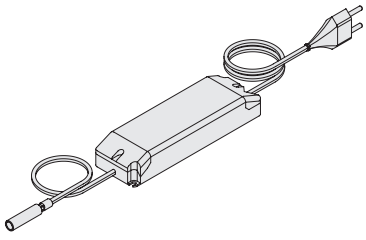

Select the transformer as appropriate to the connected light fittings.

Cover Profile, Profile Tube D30

A neat solution. Cover Profile, Profile Tube D30 keeps dirt out of the channel on a Profile Tube D30. Simply press it into place to create a closed, easy-to-clean surface. Thanks to the Cover Profile, users can get the best of both worlds – the advantages of both Tube D30 and Profile Tube D30.

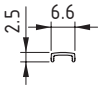

Cover Profile, Profile Tube D30	
PE-HD m = 13.0 g	
grey similar to RAL 7042, 1 pce., length 2000 mm	0.0.658.05

Round the curve and into the straight.

A level screw-fit surface on a Profile 6 D30

Ideal for mounting hinges

Adapter 6 30x30/D30

When you need to fit a square component to a cylindrical profile, Adapter 6 30x30/D30 is the answer. Simply screw it to a Profile 6 D30 to produce a level surface for securely connecting accessories with a flat surface.

The Adapter utilises the groove in Profile 6 D30, allowing users to connect panel elements and components from the MB Building Kit System with a screw and a T-Slot Nut M6. The universal anti-torsion features on the flat side provide additional hold, which means that a hinge or Keyboard Arm can be securely attached to a Profile 6 D30 at a right angle.

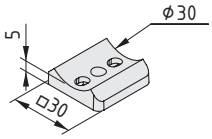

Adapter 6 30x30/D30	
Die-cast Al m = 11.0 g	
natural, 1 pce.	0.0.656.32

Label Hanger D30

The item label solution keeps everything in order in a D30 rack – without using up valuable time and space. The Label Hanger is secured in place on a frame via a clip and hangs down under the tube. There are two benefits to this design – firstly, the (Profile) Tube is left largely free for other uses, such as fitting roller conveyor fastening brackets and, secondly, the clip can be put in place and moved in seconds, which is particularly useful when storage locations need to be changed over quickly.

The practical Label Hanger is available in two sizes. Both variants protect cards or strips of paper safely behind tough PVC. The transparent hangers are open along the top edge, thereby ensuring labels can be inserted with ease. Label Hanger D30-100 is 102 mm wide and can be secured to a Clip using the pre-perforated slots. Label Hanger Profile H42 can be cut to size as required to produce Label Hangers in any width up to 2000 mm.

Label Hanger Clip D30 is responsible for keeping labels securely connected to profiles. It is narrow enough that it will fit on even the most heavily used profiles, but wide enough to hold the Label Profile in place. Additional Clips can be used according to the length of Label Hangers and the loads they are subjected to. The reusable fastening is simply pushed into place and secures a Label Hanger to all D30 Profiles, Profile Tubes and Tubes without the need for a screw connection.

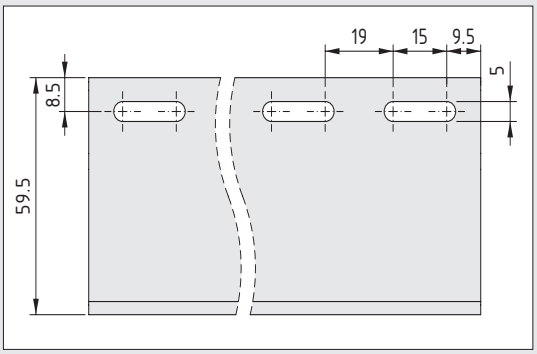

Modular dimension of Label Hanger Profile H42, which can be cut to size.

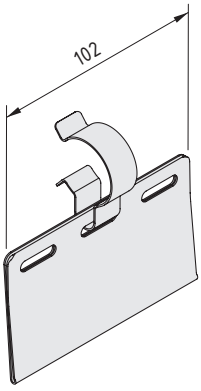

Label Hanger D30-100

Label Hanger Profile H42, 100 mm, PVC, clear
Label Hanger Clip D30, St, natural
m = 21.0 g

1 set	0.0.654.92

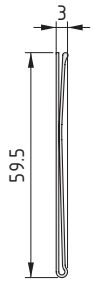

Label Hanger Profile H42

PVC
m = 237.0 g

clear, 1 pce., length 2000 mm	0.0.654.91

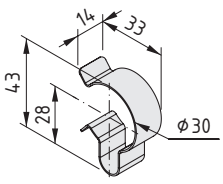

Label Hanger Clip D30

St
m = 9.0 g

bright zinc-plated, 1 pce.	0.0.654.93

Hold still.

Easy to fit

Quick-fit support for roller conveyors and castor rails

Enables exceptionally low installation heights

Bracket 6 D30
Bracket 8 D30

They hold in place without lifting up. Brackets 8 D30 and 6 D30 are used to form a stable connection where a tube of diameter 30 crosses any flat-face profile featuring a Line 8 or 6 groove. The Brackets are very shallow and yet extremely torsion resistant. This makes them ideal for securing Roller Conveyor 6 40x40 E D30 (0.0.658.69) and Castor Rail 8 40x40 (0.0.626.91) to D30 tube constructions, for example.

Note: Table-Top Fastening Set D30 (0.0.646.91) should be used when installing panel elements, as its spacer compensates for the height difference caused by Fastener D30.

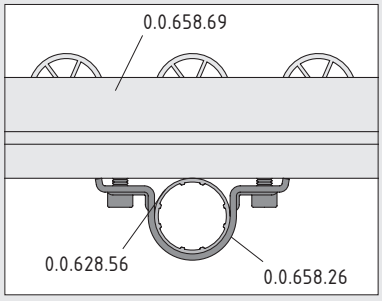

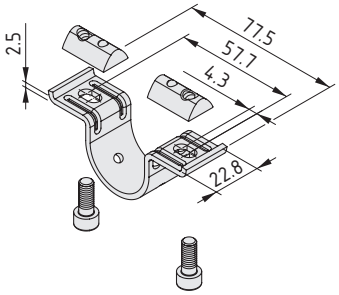

Bracket 6 D30	
Bracket, St T-Slot Nut 6 St M6, St Hexagon Socket Head Cap Screw DIN 912 M6x12, St m = 71.0 g	
bright zinc-plated, 1 set	0.0.658.26

Bracket 8 D30	
Bracket, St T-Slot Nut 8 St M6, St Hexagon Socket Head Cap Screw DIN 912 M6x15, St m = 84.0 g	
bright zinc-plated, 1 set	0.0.658.25

Side order.

Complements Table-Top Fastening Bracket D30

Table-Top Side Fastening Bracket D30

A stronger hold for shelves and table tops. Table-Top Fastening Bracket D30 (0.0.647.11) offers the fastest way to fit panels inside a tube frame, but large and thin elements need a bit more support. Table-Top Side Fastening Bracket D30 is the answer. It can be screwed to any point on a (Profile) Tube and reduces deflection. To provide a stronger hold, it also has to be screwed to the panel.

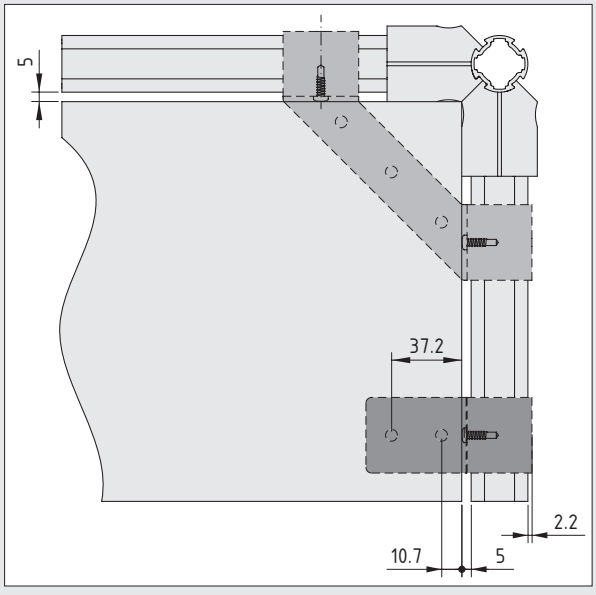

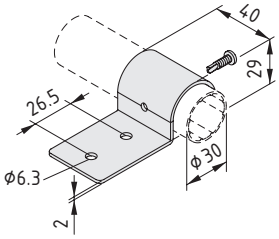

Table-Top Side Fastening Bracket D30	
Bracket, St, bright zinc-plated Button-Head Screw, self-tapping St 3.9x16, TX20 m = 75.0 g	
bright zinc-plated, 1 set	0.0.658.33

The Kanban can.

Efficient aluminium roller conveyor

Supplied ready for installation

Rigid and strong

Roller Conveyors 6 40x40 E D30

These roller conveyors are full of ingenious details. Thanks to its rigid aluminium profile, Roller Conveyor 6 40x40 E D30 can carry heavy loads, even over long distances. It is supplied preassembled and ready for immediate use. If necessary, individual castors can be replaced without having to use tools or take out other castors first. Roller Conveyor 6 40x40 E D30 is made from untreated aluminium and is available in customised lengths fitted with castors D30 (with or without flanged wheels) or with side-by-side, offset castors D30/2.

To make sure workpieces stay on track, sturdy aluminium guide rails can also be added. These are easily installed using a special groove and further boost the rigidity of the conveyor line. Additional Slide Strips stop sensitive goods from being scratched.

The underside of Roller Conveyor 6 features a Line 6 groove that can be used to secure the conveyor line to a frame, generating a power-lock connection and a lasting hold that also enhances the stability of the frame. As a result, Roller Conveyor 6 Al won't slip out of place, even when using a Cap as a stop instead of a cross profile. What's more, additional components or panel elements can be fitted to the underside of the roller conveyor to protect other transport lines underneath from falling debris and soiling.

Roller Conveyor 6 40x40 E D30 is the perfect solution when project specifications can't be met using Roller Conveyor St but don't require the full functionality and features of modular Castor Rail 8 40x40.

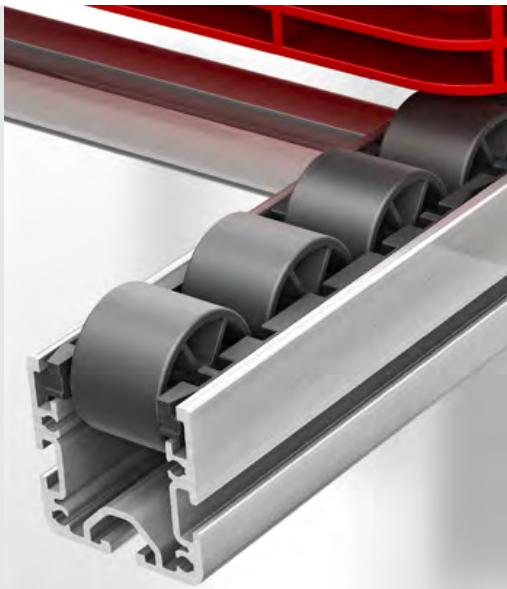

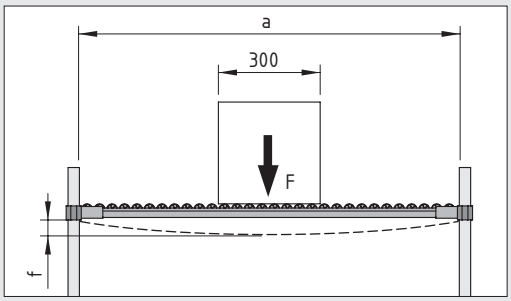

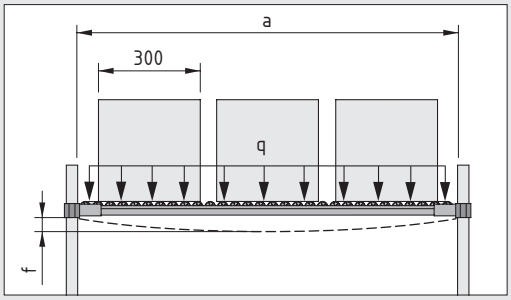

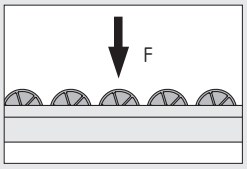

Permissible force on a single castor of Roller Conveyor 6 40x40 E D30: F < 100 N

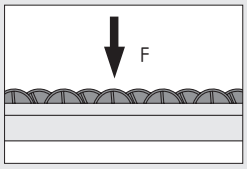

Permissible force on a single castor of Roller Conveyor 6 40x40 E D30/2: F < 50 N

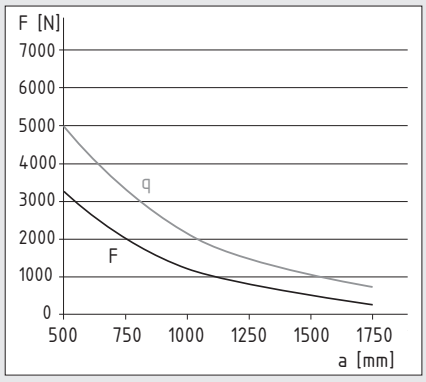

Roller Conveyor 6 40x40 E D30

Load specifications for two parallel Roller Conveyors. Maximum recommended profile deflection: f < 1/100 a

Caution:

Note the maximum load-carrying capacity of the components involved.

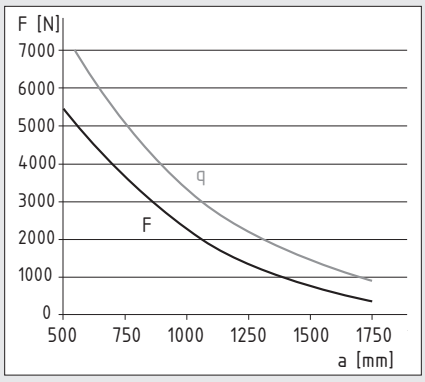

Roller Conveyor 6 40x40 E D30 with Guide Rails

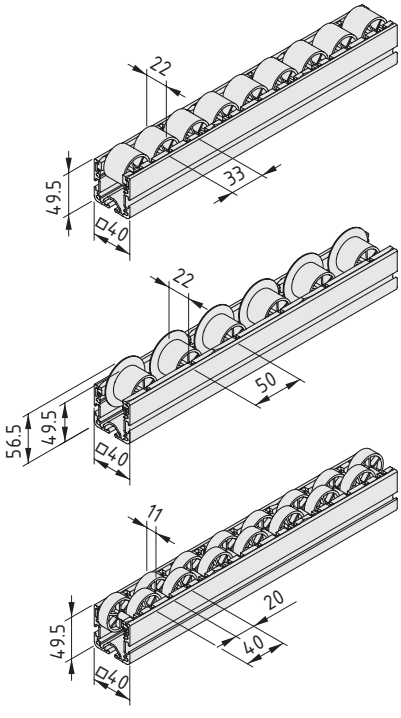

Roller Conveyor 6 40x40 E D30	6
Castor Rail 6 40x40, Al, blank Castor Inserts, PA, grey m = 1.40 kg/m	
cut-off max. 6,000 mm	0.0.658.69
1 pce., length 6000 mm	0.0.658.68

Roller Conveyor 6 40x40 E D30 with Flanged Wheel	6
Castor Rail 6 40x40, Al, blank Castor Inserts, PA, grey m = 1.32 kg/m	
cut-off max. 6,000 mm	0.0.658.71
1 pce., length 6000 mm	0.0.658.70

Roller Conveyor 6 40x40 E D30/2	6
Castor Rail 6 40x40, Al, blank Castor Inserts, PA, grey m = 1.42 kg/m	
cut-off max. 6,000 mm	0.0.658.73
1 pce., length 6000 mm	0.0.658.72

Roller Conveyor 6 40x40 E Guide Rails

Tough but gentle. The Guide Rails for Roller Conveyor 6 40x40 have a lot going for them. Made from aluminium, they are slotted into the groove that runs along the side of the roller conveyor and can withstand even rough treatment without coming away. They also make the robust roller conveyors even more rigid and reduce deflection by up to 50 percent.

Two types of guide rail are available, one that is spaced 30 mm from the centre of the roller conveyor (Roller Conveyor 6 40x40 E Guide Rail e30) and the other 60 mm from the centre line (Roller Conveyor 6 40x40 E Guide Rail e60). As a result, conveyor lines can be configured to suit the precise requirements of the containers and goods they carry.

Note: Roller Conveyor 6 40x40 E Guide Rails can also be slotted into the side groove on Castor Rail 8 40x40.

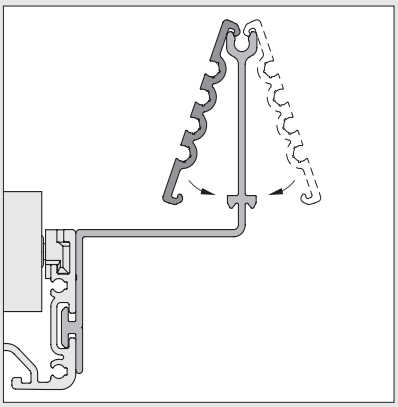

Slide Strips can also be clipped into place to protect sensitive workpieces and the Guide Rails themselves. The addition of high-strength, durable and impact-absorbing polyethylene Slide Strips means that the Guide Rails can combine the stability of aluminium with the gentle contact surface of plastic. Slide Strips can be fitted to both sides of the Guide Rail.

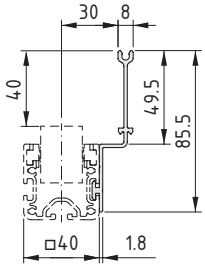

Roller Conveyor 6 40x40 E Guide Rail e30	
Al, untreated m = 0.62 kg/m	
natural, cut-off max. 6,000 mm	0.0.657.88
natural, 1 pce., length 6000 mm	0.0.657.87

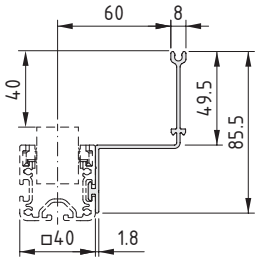

Roller Conveyor 6 40x40 E Guide Rail e60	
Al, untreated m = 0.77 kg/m	
natural, cut-off max. 6,000 mm	0.0.654.09
natural, 1 pce., length 6000 mm	0.0.654.05

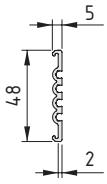

Roller Conveyor 6 40x40 E Guide Rail Slide Strip	
PE-HD m = 124.0 g/m	
grey similar to RAL 7042, 1 pce., length 3000 mm	0.0.654.94

Hold it!

Universal fastenings for Roller Conveyor 6 40x40

Roller Conveyor 6 40x40 Al Fastening Bracket D30

Whether horizontal or inclined, Roller Conveyor 6 40x40 Al Fastening Brackets make the assembly of conveyor lines a simple matter. They are first anchored securely in the Line 6 groove of Roller Conveyor 6 40x40 E D30 then hung on a (Profile) Tube D30, where they should be screwed in place for additional hold.

Roller Conveyor 6 40x40 Al Fastening Bracket U D30 and Roller Conveyor 6 40x40 Al Fastening Bracket I D30 are used to join two conveyor lines with different gradients. Roller Conveyor 6 40x40 Al, Fastening Bracket D30 with Stop H43 has been designed for use as a limit stop.

Note: Alternatively, Cap 80x40 (0.0.622.30) can be used as a stable stopping point on a roller conveyor, which means that conveyor lines can project outside the frame.

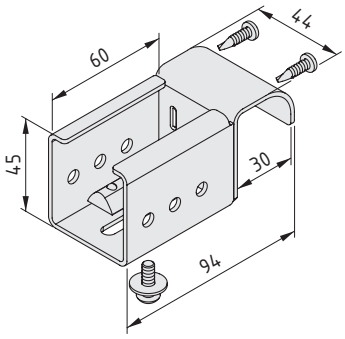

Roller Conveyor 6 40x40 Al Fastening Bracket D30

St
2 Button-Head Screws, self-tapping St 3.9x16 TX20
Hexagon Socket Head Cap Screw DIN 6912-M6x12
Washer DIN 9021-6.3
T-Slot Nut 6 St M6
m = 190.0 g

bright zinc-plated, 1 set	0.0.660.57

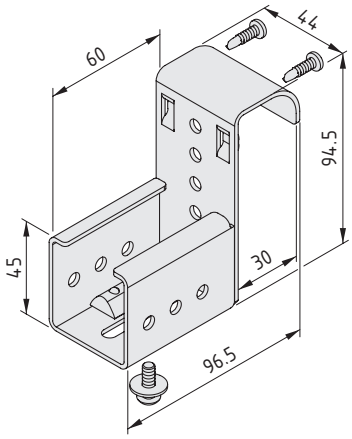

Roller Conveyor 6 40x40 Al, Fastening Bracket D30 with Stop H43

St
2 Button-Head Screws, self-tapping St 3.9x16 TX20
Hexagon Socket Head Cap Screw DIN 6912-M6x12
Washer DIN 9021-6.3
T-Slot Nut 6 St M6
m = 226.0 g

bright zinc-plated, 1 set	0.0.660.58

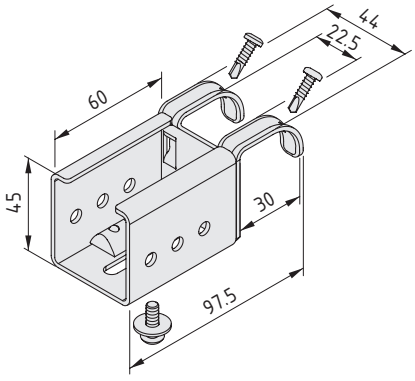

Roller Conveyor 6 40x40 Al Fastening Bracket U D30

St
2 Button-Head Screws, self-tapping St 3.9x16 TX20
Hexagon Socket Head Cap Screw DIN 6912-M6x12
Washer DIN 9021-6.3
T-Slot Nut 6 St M6
m = 183.0 g

bright zinc-plated, 1 set	0.0.660.59

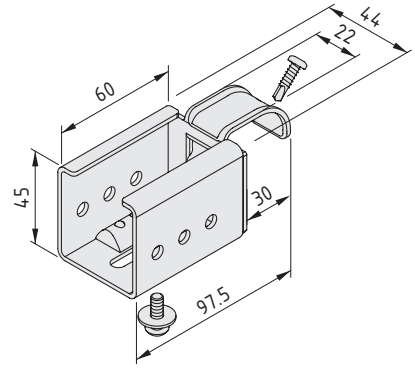

Roller Conveyor 6 40x40 Al Fastening Bracket I D30

St
Button-Head Screw, self-tapping St 3.9x16 TX20
Hexagon Socket Head Cap Screw DIN 6912-M6x12
Washer DIN 9021-6.3
T-Slot Nut 6 St M6
m = 188.0 g

bright zinc-plated, 1 set	0.0.660.60

End of the line.

Limit stop for Roller Conveyor St

Roller Conveyor St, Fastening Bracket D30 with Forward Stop H43

Roller Conveyor St Stop H43

Roller Conveyor St, Support D30 H22

A practical accessory for Roller Conveyor St. Because Roller Conveyor St Stop H43 is not mounted to a cross profile, users can build roller conveyors that project outside a frame and thus reduce reaching distances. Light transport boxes are brought safely to a halt.

When heavier loads are involved, Roller Conveyor St, Fastening Bracket D30 with Forward Stop H43 is the best option. This bracket brings boxes to a stop closer to the removal point than the tried-and-tested Roller Conveyor St, Fastening Bracket D30 with Stop H43 (0.0.652.46), which results in shorter reaching distances and better ergonomics.

Roller Conveyor St, Support D30 H22 provides additional hold by connecting Roller Conveyor St to a D30 strut running underneath it. The Support is screwed to the cross profile and the roller conveyor simply dropped in place, although it can also be screwed in place for an extra strong hold.

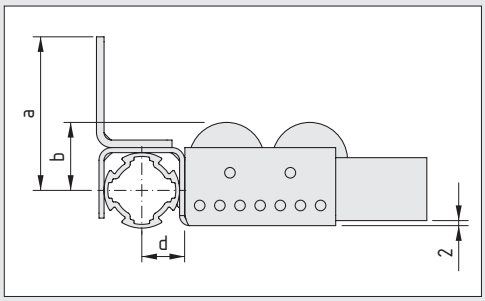

Roller Conveyor St	
Fastening Bracket D30 with Forward Stop H43 0.0.658.17	a = 66 mm b = 23 mm d = 18 mm

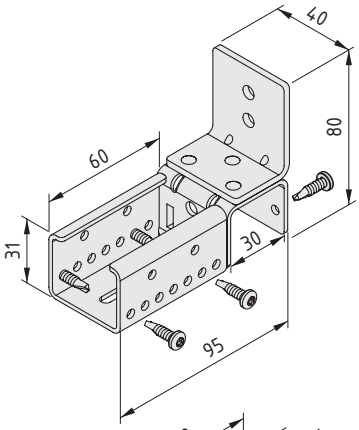

Roller Conveyor St, Fastening Bracket D30 with Forward Stop H43

St
6 Button-Head Screws, self-tapping St, 3.9x16, TX 20
m = 220.0 g

bright zinc-plated, 1 set	0.0.658.17

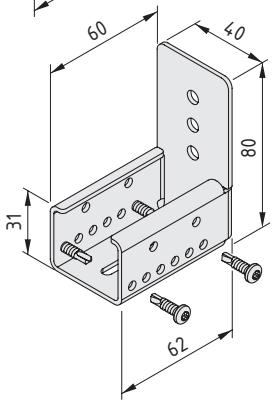

Roller Conveyor St Stop H43

St
4 Button-Head Screws, self-tapping St, 3.9x16, TX 20
m = 147.0 g

bright zinc-plated, 1 set	0.0.658.16

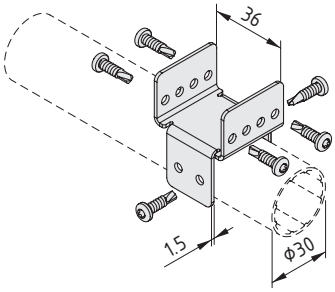

Roller Conveyor St, Support D30 H22

St
6 Button-Head Screws, self-tapping St, 3.9x16, TX 20
m = 24.0 g

bright zinc-plated, 1 set	0.0.658.18

Gentle guidance.

A gentle hold for sensitive components

Two designs

ESD-safe variants available

Brush Strips D30

Smooth but firm. Brushes made of PVC are stable enough to keep parts on track but soft enough to be gentle on sensitive surfaces. Brush Strips D30 are simply clipped onto a Profile Tube and are available in two designs. Brush Strip D30 T1 has two parallel rows of brushes while Brush Strip D30 T2 has two rows of brushes that project out to the side. Each design is also available in an ESD-safe variant.

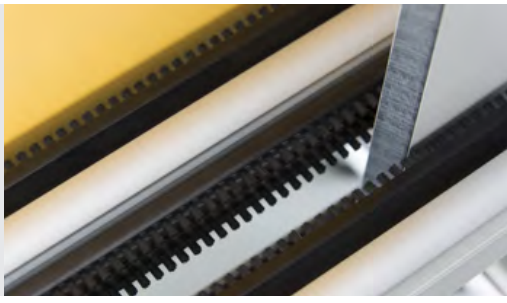

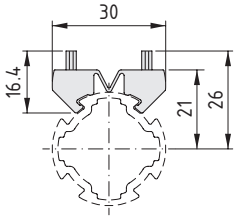

Brush Strip D30 T1	
PVC m = 143.0 g	
grey similar to RAL 7042, 1 pce., length 500 mm	0.0.653.01
Brush Strip D30 T1 ESD	ESD
PVC m = 147.0 g	
black similar to RAL 9005, 1 pce., length 500 mm	0.0.654.66

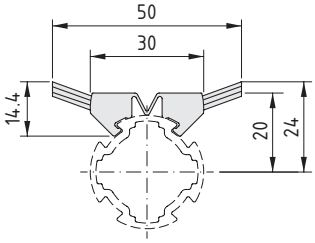

Brush Strip D30 T2	
PVC m = 151.0 g	
grey similar to RAL 7042, 1 pce., length 500 mm	0.0.654.14
Brush Strip D30 T2 ESD	ESD
PVC m = 155.0 g	
black similar to RAL 9005, 1 pce., length 500 mm	0.0.654.64

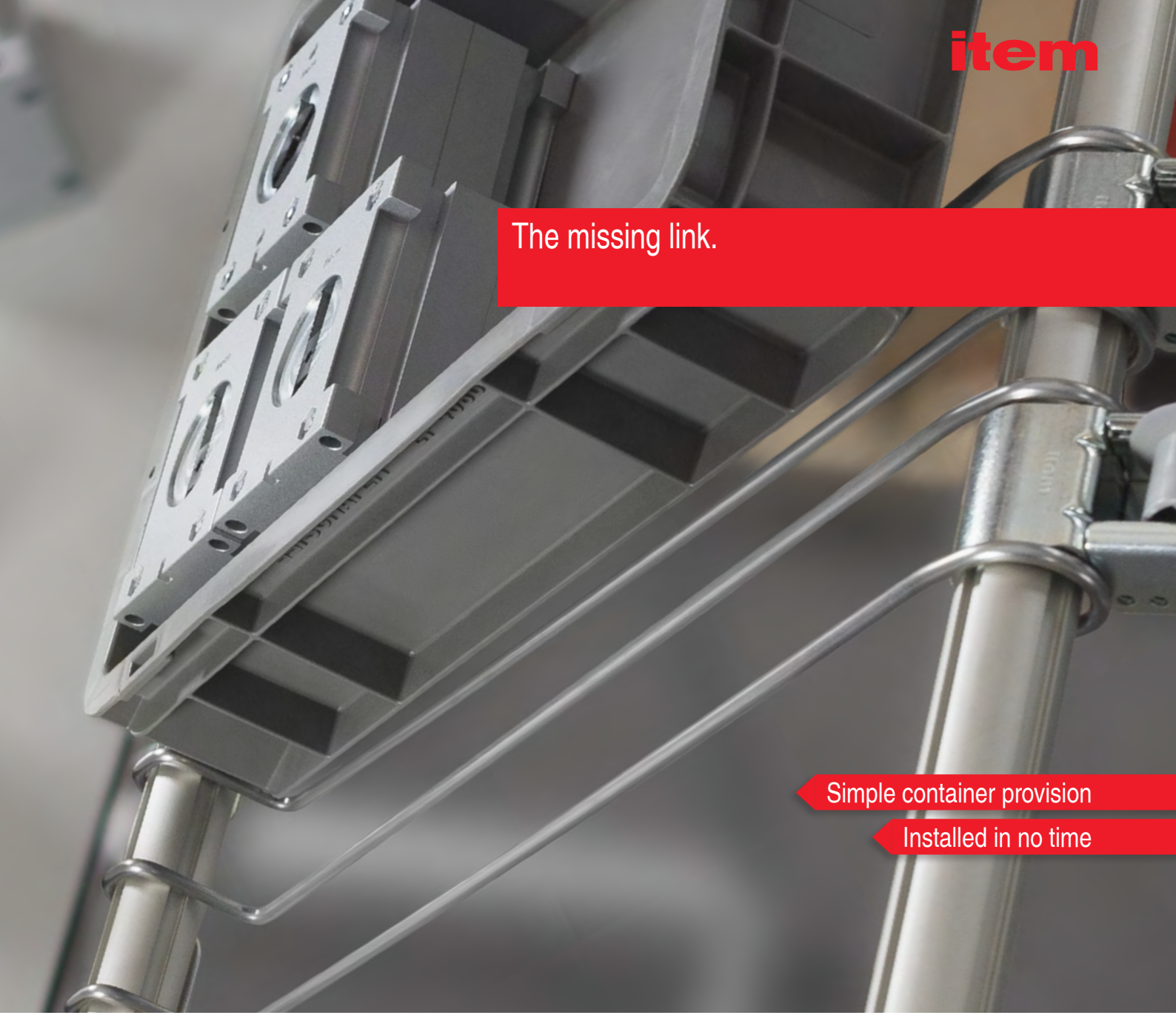

Slide Link D30

Getting containers close to hand really can be this easy. Slide Links D30 are the perfect finishing touch for a roller conveyor. Transport boxes simply glide that last little stretch over the Slide Link, where they are held securely in place.

Slide Links D30 are fitted in no time – even when roller conveyors are already screwed in place! They are also suitable for use with all item roller conveyors. Slide Links are available in different sizes to suit containers of different lengths – 200 mm, 300 mm and 400 mm.

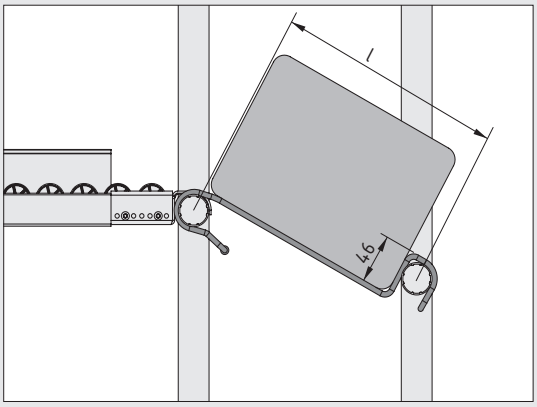

The length of the Slide Links has been matched to the dimensions of transport boxes. An additional section of tubing secures the top ends of the wire against lateral movement.

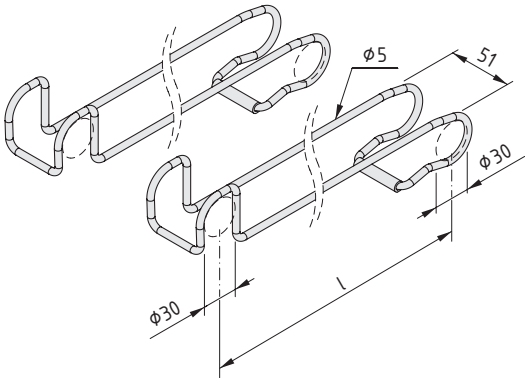

Slide Link D30 220	
2 Slide Links 220, St, stainless 2 tubing cut-offs, CR, black l = 220 mm m = 136.0 g	
stainless, 1 set	0.0.658.77

Slide Link D30 330	
2 Slide Links 330, St, stainless 2 tubing cut-offs, CR, black l = 330 mm m = 348.0 g	
stainless, 1 set	0.0.658.76

Slide Link D30 440	
2 Slide Links 440, St, stainless 2 tubing cut-offs, CR, black l = 440 mm m = 416.0 g	
stainless, 1 set	0.0.658.75

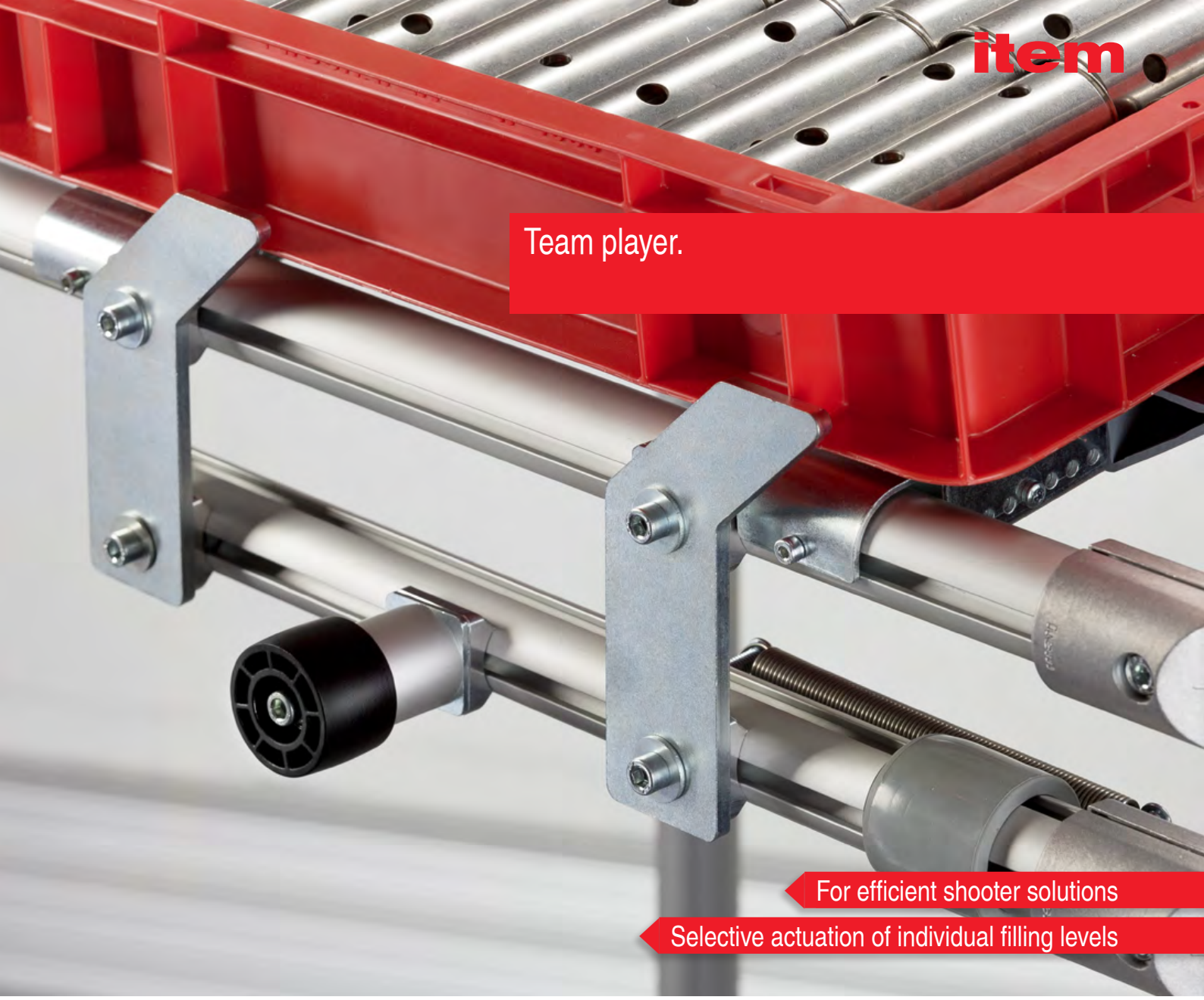
Team player.
For efficient shooter solutions
Selective actuation of individual filling levels

Release Units D30

Using tugger trains to load and unload roller conveyor racks as part of an automated system is efficient and reduces costs. And compact Release Unit D30 now makes it extremely easy to design customised shooter solutions that get transport containers (small load carriers, SLCs) moving from station to station.

Release Unit D30 is based on a robust Bar that keeps even heavy workpieces in place on a roller conveyor during transport. However, when there is side-on contact between an Actuator Ramp and Actuator Roller, the locking mechanism is automatically opened, thereby ensuring that transport boxes are only released when shooter and workstation are correctly aligned. The Spring-Loaded Reset Device ensures the Bar travels back to its original position as soon as the contact between Ramp and Roller is broken.

Because the Ramp and Roller contact each other from the side, users can build selective shooter solutions whereby each carriage in a tugger train is triggered at a different unloading point. By customising the installation height of the actuation elements, users can tailor the release action to their needs so that various provisioning lines can be correctly loaded or unloaded in a single pass. Actuator Ramps are available in two installation depths to suit different roller conveyors (38 and 61 mm). This ensures that even conveyor lines that protrude can be reliably actuated.

How Release Unit D30 works: Stable Bars hold the load in place (e.g. transport boxes). When the shooter pulls alongside, its actuator comes into contact with the Ramp on the workstation. Because the strut for the Actuator Roller is spring mounted, it follows the contour of the Ramp as it travels and is pushed up and to the side. This causes the Bars that are fastened to the upper profile to pivot to the side, thereby ensuring that the load is only released when the roller conveyor is correctly aligned.

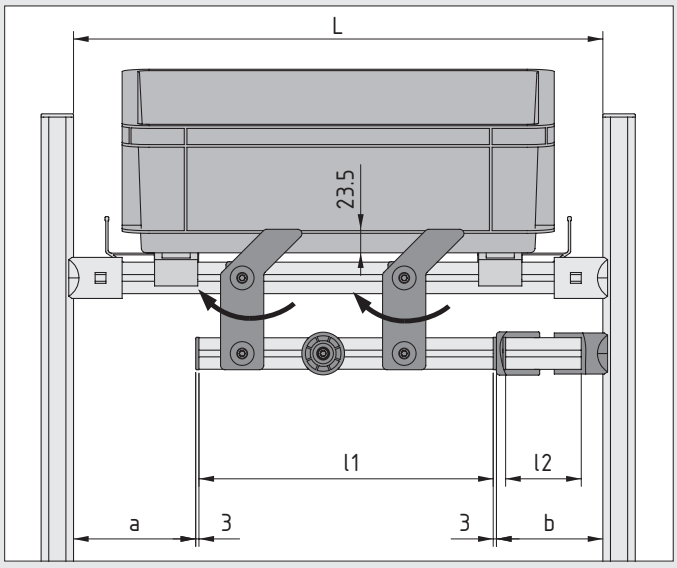

L: Total clearance
a: Recommended minimum clearance = 113 mm
b: min. 91 mm
l1 = L - a - b - 6 mm (Profile 6 D30 for the Roller strut)
l2 = b - 28.5 mm (Profile 6 D30 for the stop)

When the shooter is released, the Roller strut moves closer to the roller conveyor as the Ramp pushes it up and to the side. This movement forces the Bars to pivot to the side. When the shooter is moved away, the pressure on the ball-bearing mounted Actuator Roller drops and the Spring-loaded Reset Device pulls the Roller strut back down to the starting position.

The Bars can be installed so that they open to the right or left as appropriate to the transport rack's direction of travel.

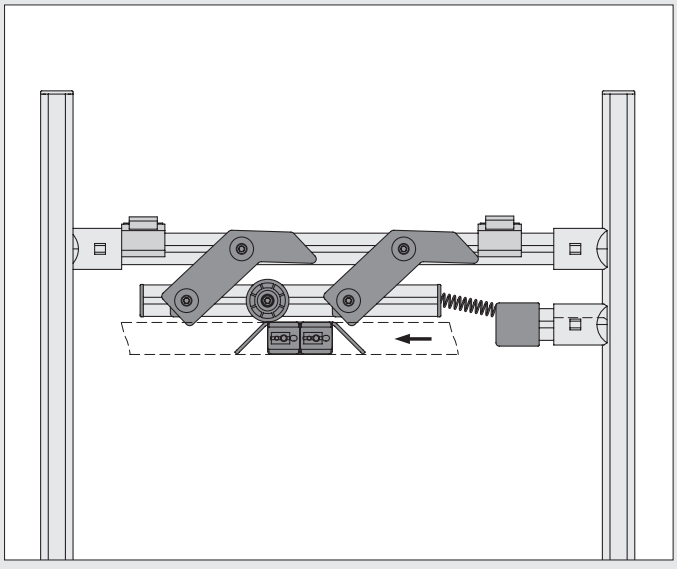

The shooter is released when the Actuator Roller runs over the Actuator Ramp.

A Release Unit D30 Actuator Roller operates at least two Bars at once and can operate more, if necessary. Depending on the width of the load, a second roller conveyor can be secured simply by adding an additional Bar.

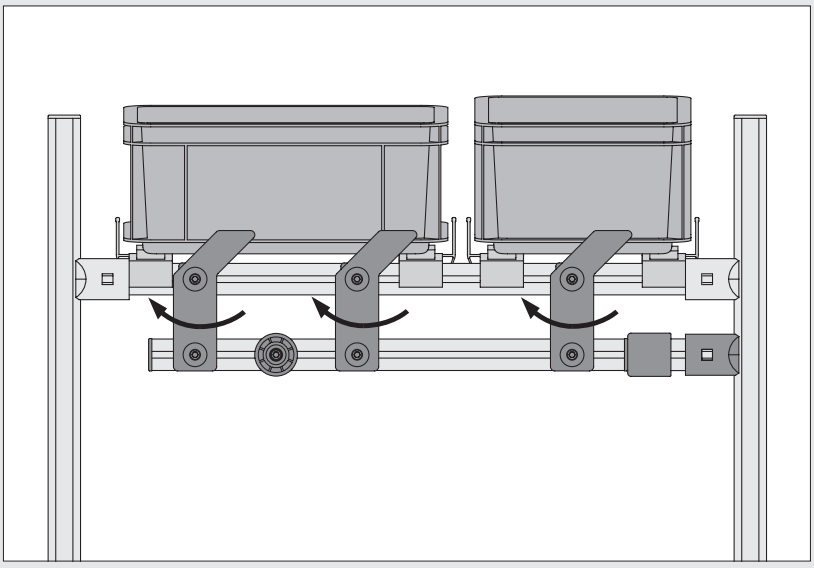

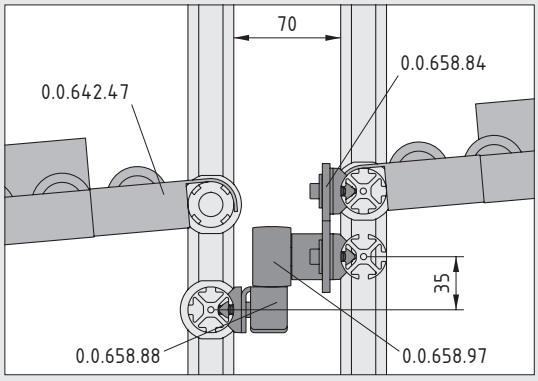

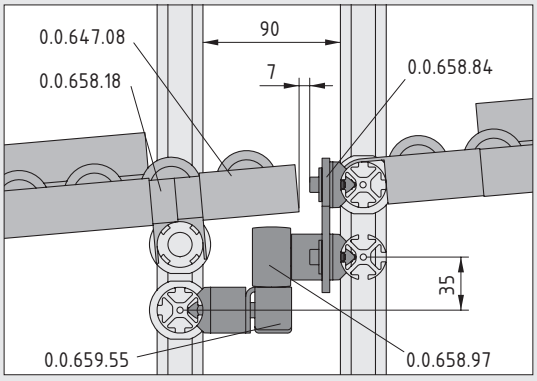

The Release Unit can perform the same function even on protruding roller conveyors.

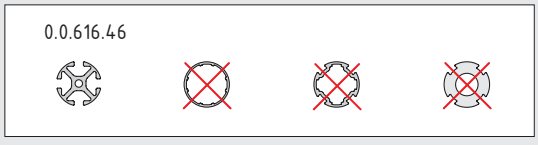

Note:

Profile 6 D30 (0.0.616.46) must be used to fasten the Bars.

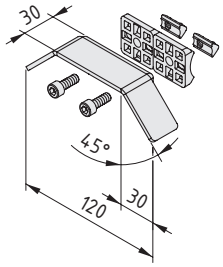

Release Unit D30 Actuator Ramp 120-38

Actuator Ramp, St, bright zinc-plated
2 Adapters 6 30x30/D30, die-cast Al
2 Hexagon Socket Head Cap Screws DIN 912-M6x16, St, bright zinc-plated
2 T-Slot Nuts 6 St M6, St, bright zinc-plated
m = 165.0 g

1 set	0.0.658.88

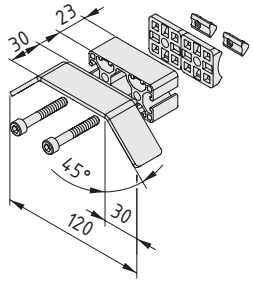

Release Unit D30 Actuator Ramp 120-61

Actuator Ramp, St, bright zinc-plated
Profile 6 60x30 2N light 23 mm, Al anodized
2 Adapters 6 30x30/D30, die-cast Al, natural
2 Hexagon Socket Head Cap Screws DIN 912-M6x16, St, bright zinc-plated
2 T-Slot Nuts 6 St M6, St, bright zinc-plated
m = 212.0 g

1 set	0.0.659.55

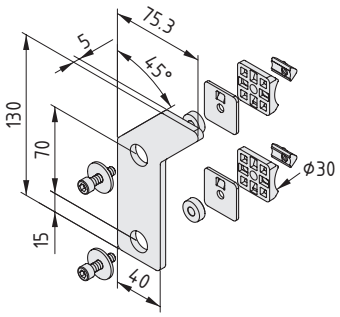

Release Unit D30 Bar T1

Bar H22, St, bright zinc-plated
2 bush liners, St, bright zinc-plated
2 spacer plates, St, bright zinc-plated
2 Adapters 6 30x30/D30, die-cast Al, natural
2 T-Slot Nuts 6 St M6, St, bright zinc-plated
2 washers DIN 440 M6, St, bright zinc-plated
2 Hexagon Socket Head Cap Screws DIN 912-M6x16, St, bright zinc-plated
m = 282.0 g

1 set	0.0.658.84

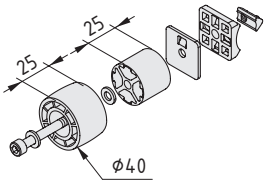

Release Unit D30 Actuator Roller D40-60 side contact

Roller D40, ball-bearing mounted
Profile 6 D30 4N, Al anodized
spacer plate, St, bright zinc-plated
2 Adapters 6 30x30/D30, die-cast Al, natural
2 T-Slot Nuts 6 St M6, St, bright zinc-plated
2 washers DIN 125-6,4, St, bright zinc-plated
2 Hexagon Socket Head Cap Screws DIN 912-M6x60, St, bright zinc-plated
m = 113.0 g

1 set	0.0.658.97

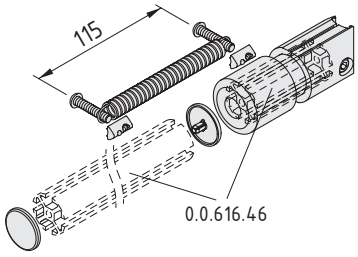

Release Unit D30 Spring-loaded Reset Device

Fastener D30, die-cast Al, natural
Tube End Cap D30, NBR Sh 60A
Extension spring 1.25x12.7x121, St, stainless
2 Caps 6 D30, PA-GF, black
2 Button-Head Screws ISO 7380 M6x30, St, bright zinc-plated
2 T-Slot Nuts 6 St M6, St, bright zinc-plated
m = 208.0 g

1 set	0.0.660.46

Alphabetical Register

A
Adapter 6 30x30/D30 53
Adjustable Foot D47, M10x30 10
Adjuster Profile 8 18
B
Brackets D30 56
Brush Strips D30 66
C
Cable Guide Profile 8 40x16 43
Caps LRF 8 20
Connecting Cable, LED Light Fitting 49
Connecting Cable, LED Machine Light Fitting 47
Cover Profile X 8 Al 7
Cover Profile, Profile Tube D30 52
D
Diagonal Strut Set 8 8
Distribution strip inserts 41
Door Lip Seals T 33
Drive Set GSF 8 40 25
Drive Unit GSF 8 40 R10 23
E
Extension Cable, LED Light Fitting 50
F
Fastening Set Profile 8 240x40 9
H
Honeycomb Sheet panels 12
L
Label Hanger D30 54
Label Profile 8 40 E 38
LED Electronic Transformers 50
LED Illuminated Magnifier D150 44
LED Light Fittings 48
LED Machine Light Fitting and LED Light Fitting accessories 50
LED Machine Light Fittings 46
LED Splitters 50
Limit Stop, Runway Profile 8 13
Linear Unit GSF 8 40 R10 21
Linear Unit KRF 8 80x40 ZR, synchronous drive 27
M
Multi-wall Sheet panels 11
P
Profile 8 160x60 4N K56 39
Profiles X 8 5
Profiles X 8 - XMS 32
Protective Profile 6 30x15 E 4
R
Release Units D30 69
Roller Conveyor 6 40x40 Al Fastening Bracket D30 62
Roller Conveyor 6 40x40 E Guide Rails 60
Roller Conveyor St Stop H43 64
Roller Conveyor St, Fastening Bracket D30 with Forward Stop H43 64
Roller Conveyor St, Support D30 H22 64
Roller Conveyors 6 40x40 E D30 58
S
Safety Switch 8, 24V DC 34
Slide Link D30 67
Slide LRF 8 14
Slide Profiles LRF 8 19
Slide Set GSF 8 80x40 26
Slide Sets LRF 8 17
Synchroniser Shaft Cover Set KRF 8 80 ZR 31
Synchronising Set KRF 8 80 ZR 30
T
Table-Top Side Fastening Bracket D30 57
Timing-Belt Reverse Unit GSF 8 40 R10 23
W
Waste Bin 35l 42
Waste Sack 35l 42
Wireless LED Dimmer Receiver 50
Wireless LED Dimmer Remote 50
Work bench 4 E FIFO 36

Other item product catalogues

MB8 Building Kit System

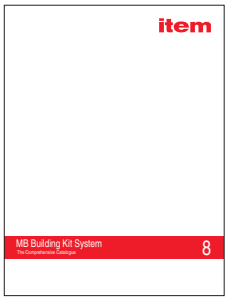

Line XMS

LP Building Kit System

TPS – Stairway/Platform System

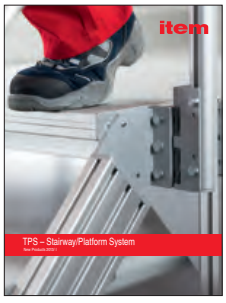

Work bench systems

Patents
Any copying of protected products is a violation of these rights and, as such, shall be liable to compensation. Data and illustrations in this catalogue do not discharge the user from the obligation to carry out his own checks to determine whether the industrial property rights of third parties are infringed.

Product liability
item shall be liable, within the framework of the applicable legal provisions, for the promised characteristics of the products shown in this catalogue. Any claims for liability above and beyond such – in particular relating to products created by third parties using products included in this catalogue – are expressly excluded.

Conditions of use
The products in the item MB Building Kit System are suitable for use in dry conditions and over the temperature range -20°C to +70°C, unless otherwise stated. item must be consulted where products are to be used for applications outside these limits.

Conformity with Directive 2011/65/EU (“RoHS”)
item has made a voluntary undertaking to refrain from using hazardous substances as defined in Directive 2011/65/EU in the products it sells, irrespective of their subsequent purpose which, in the majority of cases, does not fall under this Directive.

Concept, design and realisation
item Industrietechnik GmbH,
Media design department

Photography
item Industrietechnik GmbH

Always there for you.
Always up to date: Our website at www.item24.com offers further information on all the products and technologies that item offers.

Technical modifications and errors reserved.
All rights reserved. Use of texts and illustrations or reprints of any kind only permitted with our prior written consent. This applies in particular to reproduction, translation or use in electronic systems.

item is a registered trademark of item Industrietechnik GmbH.

© item Industrietechnik GmbH 2013

© item Industrietechnik GmbH Made in Germany 0.4.121.66 10/2013

Your distribution and service partner

item

Your ideas are worth it.

item Industrietechnik GmbH
Friedenstrasse 107-109
42699 Solingen
Germany

Phone +49 212 6580 0
Fax +49 212 6580 310

info@item24.com
www.item24.com